VOL. 15 NOTES FROM THE SHOP NO. 85

Woodsmith®

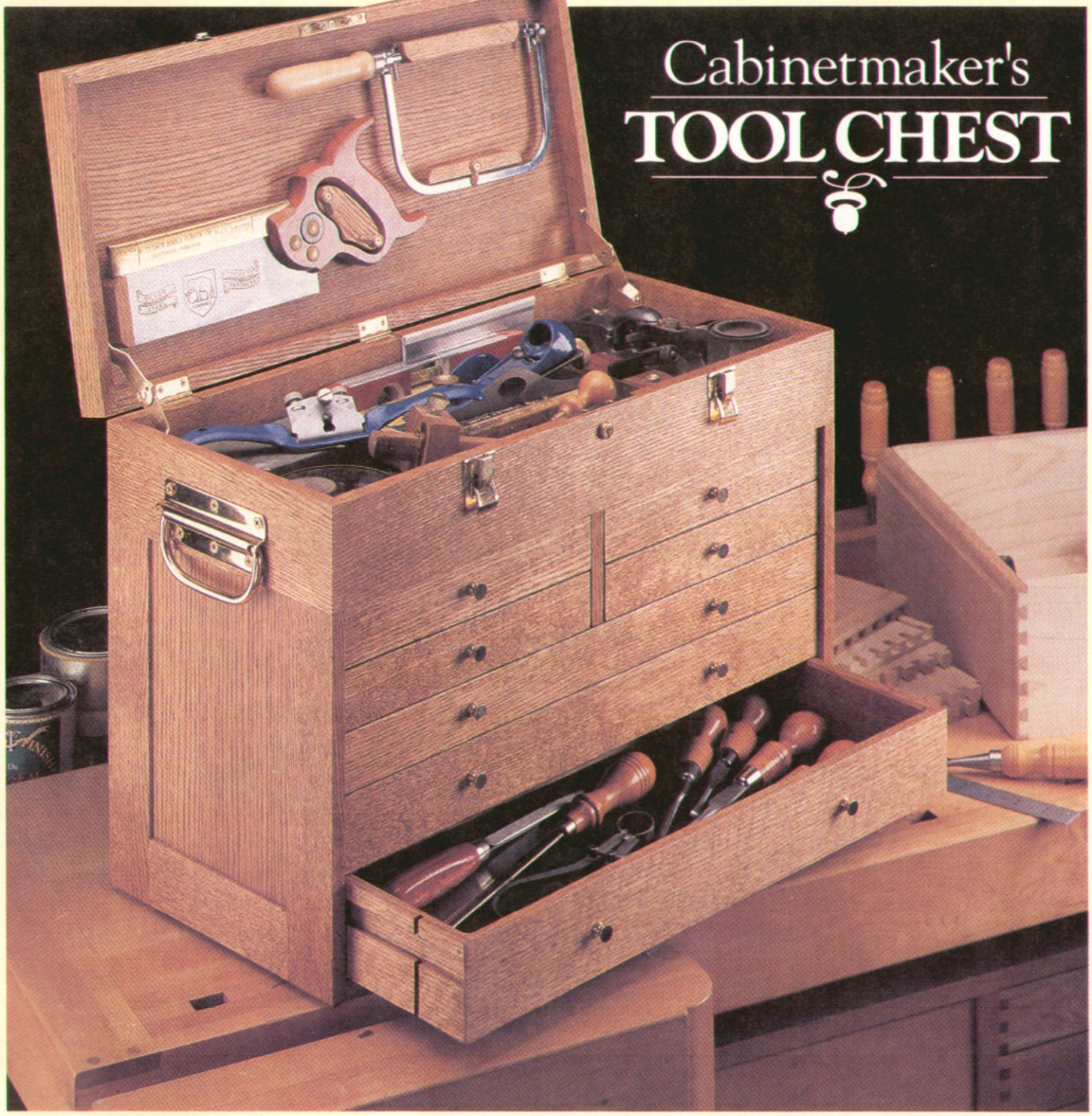

No. 85 February, 1993

Woodsmith®

Editor Donald B. Peschke
Managing Editor Douglas L. Hicks
Assistant Editors James M. Dolan, Philip A. Totten, Jonathan Garbison

Creative Director Ted Kralicek
Art Director Rod Stoakes
Senior Illustrators David Kreyling, Chris Glowacki
Illustrators Dirk Ver Steeg, Cinda Shambaugh
Photographer Crayola England
Design Director Ken Munkel
Senior Designer Jan Hale Svec
Designer Kent Welsh
Shop Manager Steve Curtis

Circulation Director Liz Bredeson
Subscription Manager Sandy Baum
Circulation Analyst Rod Cain
Newsstand Sales Kent A. Buckton

PUBLISHING SERVICES
Associate Editor Gordon C. Gaippe
Sr. Graphic Artist Robert H. Whitmer
Illustrator Mark Higdon

CORPORATE SERVICES
Controller Paul E. Gray
Accounting Linda O'Rourke
Bookkeeping Julianne Spears
Information Serv. Mgr. Joyce Moore
Network Administrator Douglas M. Lidster
Administrative Assts. Cheryl A. Scott, Julia Fish
Receptionist Jeanne Johnson
Building Maintenance Ken Griffith, Archie Krause

WOODSMITH MAIL ORDER
Marketing Director Robert Murry
Art Director Cindy Jackson
Customer Service Mgr. Laura McNelly
Project Supplies Linda Jones
Technical Support Jeff Janes
Systems Operator Linda Morrow
Receptionist Keri Lee

CUSTOMER SERVICE
Jennie Enos (Supr.), Jennifer Murphy, Joy Johnson, Sara Kono, Ami Blanshan, Anna Cox, Chris Lo

SHIPPING DEPARTMENT
Jerry Carson (Supervisor), Gloria Sheehan, Donnie McVey, Chuck Carlson, Sylvia Carey

WOODSMITH STORE
Dave Larson (Manager), Wendell Stone, Vicki Edwards, Dominic Bazzocco, Steve Johnson

Woodsmith® (ISSN 0164-4114) is published bimonthly (Feb., April, June, Aug., Oct., Dec.) by Woodsmith Corporation, 2200 Grand Ave., Des Moines, IA 50312. Printed in U.S.A.
Woodsmith® is a registered trademark of Woodsmith Corp. Copyright© **1993** Woodsmith Corporation. All rights reserved.
Subscriptions: Single copy: $3.95. One year subscription (6 issues), $17.95. Two years (12 issues), $31.95. (Canada/Foreign add $5 per year, U.S. funds.)
Second Class Postage Paid at Des Moines, IA and at additional offices.
Postmaster: Send change of address to *Woodsmith*, Box 10718, Des Moines, IA 50350.
Subscription Questions? Call 1-800-333-5075, 8:00 am to 5:00 pm, Central Time, weekdays.

EDITOR'S COLUMN

Sawdust

When I finished building the oak Cabinetmaker's Chest shown on the cover, I was like a kid on Christmas morning. I didn't quite know where to start. Which of my favorite hand tools should go in the chest? And then what tools should go in each drawer?

I had a lot of help figuring this out by conducting a highly unscientific poll of some of the *Woodsmith* staff. (As you might imagine, there were a number of "interesting" discussions in the shop on this one.) The result is the article "Our Favorite Hand Tools" starting on page 28.

TOOLS. Of all the tools, the one I use most often is also the smallest: the 6" rule. I'm constantly using it, so I keep it where I can always find it — in the pocket of my apron.

All the tools on our list are like the 6" rule. We *use* them. I reach for the try square whenever setting up a machine. I use a scraper to clean up saw tooth marks and burns. And the block plane to trim just a hair off a drawer to get it to fit.

I'd like to mention one tool on the list that doesn't get used quite as much as the others, but it's still *my* favorite: the No. 5C Bailey jack plane. I got this plane from my father, and plan to hand it down to the next generation. While machinery designs come and go, this plane is essentially the same as it was 100 years ago. A well-designed tool — one that works — rarely becomes obsolete.

Is this collection of tools expensive? I did some figuring, and you can buy all eighteen of the tools on our list for about $500. Seems like a lot of money, but they're worth it. You could find cheaper ones at a discount store or home center, but I wouldn't recommend it. The tools we're showing are quality tools. They should last a lifetime.

FILLING THE CHEST. Once the tools were picked out, I started arranging them. Here's one thing I've learned about that. When organizing, take your time. Once a tool is in a spot, it's likely to have a permanent home there. Before long you'll be reaching for that drawer first to find the tool. Even if you move it to a better spot later.

So, with the Cabinetmaker's Chest, I took my time and tried to start out with everything in the best possible location.

NEW FACE. We've added a new member to the *Woodsmith* family. Rod Cain has joined us as a circulation analyst. Rod's background in market research and statistical analysis should help our circulation department keep track of all those numbers.

PUBLISHER'S STATEMENT. Speaking of numbers, once a year the post office requires that we print a Publisher's Statement (see below). It has a lot of numbers in it, but the good news is that we continue to grow. The average circulation per issue is up about 50,000 from last year. Thanks for your support and for being part of this growth.

Don

STATEMENT OF OWNERSHIP, MANAGEMENT AND CIRCULATION
(Required by 39 U.S.C. 3685)

1. Title of Publication: Woodsmith. 1a. Publication No.: 0164-4114. 2. Date of Filing: September 16, 1992. 3. Frequency of issue: Bimonthly. 3a. No. of issues published annually: 6 (six). 3b. Annual subscription price: $17.95. 4. Complete mailing address of known office of publication: 2200 Grand Avenue, Des Moines, (Polk County), Iowa 50312-5306. 5. Complete mailing address of the headquarters of general business offices of the publisher: 2200 Grand Avenue, Des Moines, Iowa 50312-5306. 6. Full names and complete mailing address of publisher, editor, and managing editor: Publisher and Editor: Donald B. Peschke, 2200 Grand Avenue, Des Moines, Iowa 50312; Managing Editor: Douglas L. Hicks, 2200 Grand Avenue, Des Moines, Iowa 50312. 7. Owner: Woodsmith Corporation, 2200 Grand Avenue, Des Moines, Iowa 50312; Donald B. Peschke, 2200 Grand Avenue, Des Moines, Iowa 50312. 8. Known bondholders, mortgagees, and other security holders owning 1 percent or more of total amount of bonds, mortgages or other securities: None. 9. (Does not apply.) 10. Extent and nature of circulation:

	Average no. copies each issue during preceding 12 months	Average no. copies of single issue published nearest to filing date
A. Total no. copies printed (net press run)	445,000	425,000
B. Paid and/or requested circulation:		
1. Sales through dealers, street vendors and counter sales	16,522	13,476
2. Mail subscriptions (paid and/or requested)	384,688	368,512
C. Total paid and/or requested circulation	401,210	381,988
D. Free distribution by mail, carrier or other means, samples, complimentary, and other free copies	348	369
E. Total distribution	401,557	382,357
F. Copies not distributed		
1. Office use, left over, unaccounted, spoiled after printing	19,259	22,429
2. Returns from news agents	24,184	20,214
G. Total	445,000	425,000

11. I certify that the statements made by me above are correct and complete.
(signed) Donald B. Peschke, Publisher/Editor

A LOOK INSIDE

Contents

Tips & Techniques 4 *Five great tips. 1) Ripping Thin Strips. 2) Cutting a Lid from a Box. 3) Jaw Pads for Clamps. 4) Shop-Made Rasp. 5) A Better Glue Bottle.*

Shelving Unit 6 *These shelves can be positioned to hold items of various sizes. And the whole unit can still be knocked down and easily moved.*

Resawing 10 *How to cut thick wood into thin stock on the band saw and table saw. Plus, some interesting effects that can be achieved from resawing.*

Portable Planer 14 *How to get the most out of a portable thickness planer. Also, a special section on trouble shooting.*

Shop Notes 16 *1) Adjusting Drawer Runners. 2) Buying Pine. 3) Aligning Lid Mortises. 4) Cutting Short Dowels.*

Sanding Table 18 *The winner of our Dust Collection Contest solves two common shop problems — collecting dust when sanding, and filtering dust from the air.*

Cabinetmaker's Chest 20 *This oak Cabinetmaker's Chest has seven drawers as well as a deep storage compartment under the lid.*

Favorite Hand Tools 28 *The Woodsmith staff offers some thoughts on what tools belong in every woodworker's shop.*

Sources 31 *Hardware and supplies needed for the projects in this issue.*

Shelving Unit *page 6*

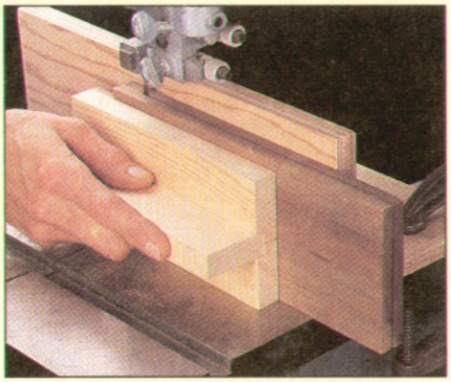

Resawing *page 10*

Cabinetmaker's Chest *page 20*

Our Favorite Hand Tools *page 28*

Tips & Techniques

RIPPING THIN STRIPS

■ I rip a lot of thin strips while building bent lamination projects. But while ripping the strips on my table saw, they often got hung up between the blade and fence. Or they became jammed in the opening between the blade and the insert.

To avoid these problems, I now rip the strips a little differently. Instead of cutting the strips between the blade and the rip fence, I rip them on the waste side of the blade (the side of the blade opposite the fence), refer to Fig. 2.

By ripping them this way the strip can't get pinched — it just falls away from the blade.

To get started, I first place a piece of masking tape just to the outside and slightly in front of the blade, see Fig. 1. The distance between the outside edge of the blade and the inside edge of the tape equals the desired thickness of the strip.

Then, to rip thin strips, first position the left edge of the workpiece against the right edge of the tape. Now slide the rip fence against the opposite edge of the workpiece and lock the fence in place, see Fig. 2.

After ripping the first strip, start over by placing the workpiece against the tape and sliding the fence up to the workpiece, see Fig. 3. Repeat this procedure for each additional strip.

Safety Note: Don't rip strips from boards less than 1½" wide.

Roland Romito
Bedford, Ohio

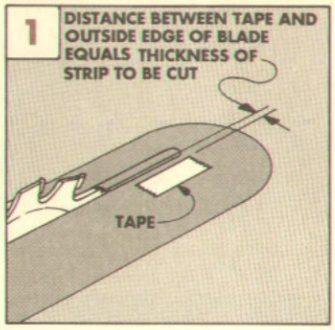

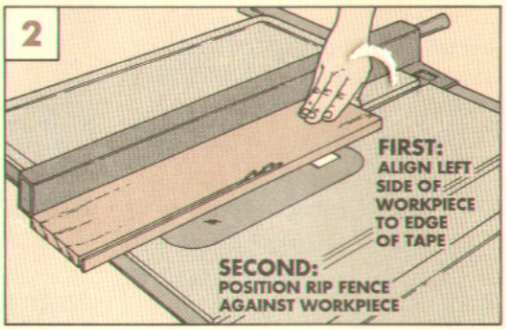

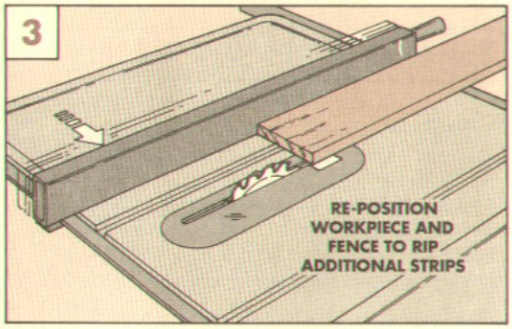

CUTTING A LID FROM A BOX

■ I read with interest your description in *Woodsmith* No. 84 of how to cut a lid from a box. But I've been using a method for years that's faster and easier than your technique.

First I set the saw blade about 1/32" below the thickness of the box sides, see Fig. 1a. (I usually just eyeball this measurement by placing a piece of scrap from my project up against the blade.)

Then adjust the rip fence so the distance between the fence and blade equals the desired height of the lid, see Fig. 1a.

Now rip all four sides of the box to establish the lower edge of the lid, see Fig. 1. But because the blade is set just below the thickness of the box sides, the lid will remain attached to the box by a thin membrane of wood. This membrane is just enough to keep the kerf from pinching the saw blade.

Once you've ripped all four sides of the box, the lid is ready to be removed. To do this, use a sharp utility knife to cut through the membrane, see Fig. 2. Note: Always cut through the membrane on all four sides. You want to avoid cracking the membrane apart. If you do, you could possibly split and damage the edges of the box or lid.

After you've separated the lid from the box, sand all the edges to completely remove the remaining slivers of the membrane, see Fig. 3.

Bueron B. Taylor
Sacramento, California

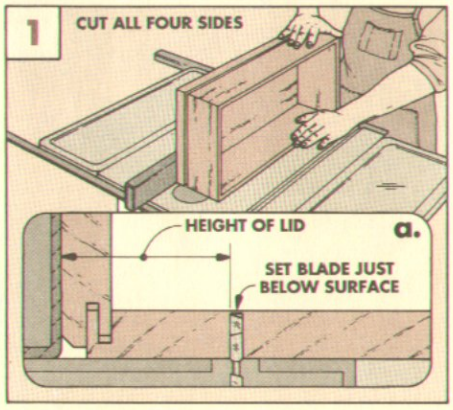

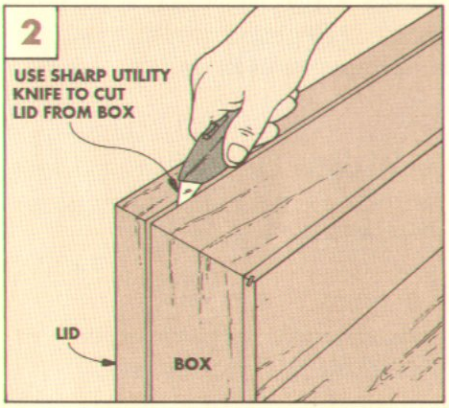

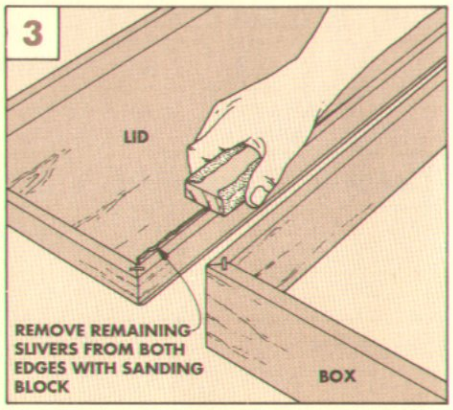

PIPE CLAMP JAW PADS

■ Through the years I've tried a variety of different methods for protecting workpieces from the jaws of a clamp. But recently I discovered a method that seems to be the best one yet.

I cover the jaws of the clamp with hot melt glue. Hot melt glue when cured has a little give to it — it's like hard rubber. The glue provides just the right amount of cushion for protecting the workpiece from the jaws.

To cover the jaws of the clamp, first spread a thick layer of hot melt glue from a hot glue gun over the face of one jaw, see Fig. 1. Then before the glue has a chance to cool, cover the glue with a piece of waxed paper and lightly press a small block of wood into the waxed paper, see Fig. 2.

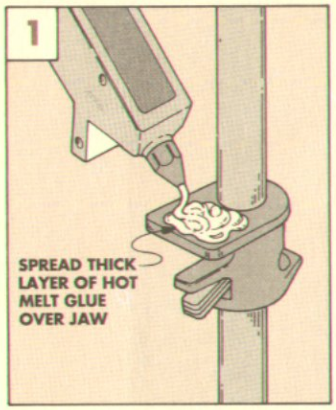

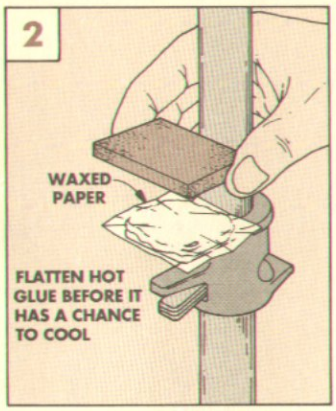

You want to apply just enough pressure with the block so the glue flattens out. Ideally, the glue should cover the entire face of the jaw and ooze over the edges a bit. Once the glue cools, remove the waxed paper. Note: Some of the waxed paper may stick to the glue. That's okay — it will eventually wear off.

After you've completed one jaw, do the same to the other jaw.

Jim Denman
Framingham, MA

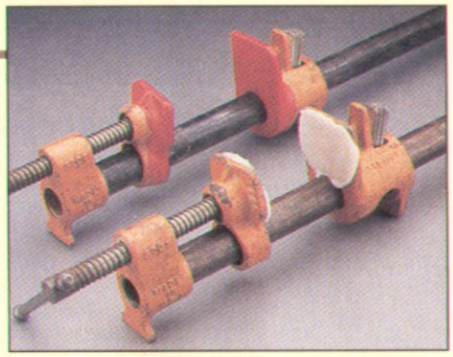

Editor's Note: When we were testing this tip we also thought of using "Plasti Dip" to cover the jaws, see Sources, page 31.

"Plasti Dip" is a rubber-like coating that many metal tool handles are dipped in. We bought some at the local hardware store and tried it, see photo. It did a good job of protecting the workpiece.

First remove the clamp from the pipe, then follow the instructions on the can. We applied two coats to each jaw.

SHOP-MADE RASP

■ It doesn't happen very often, but a while back I broke a band saw blade. My first reaction was to toss it out with the trash. But after some thought, I came up with a way to put it to good use — I made a rasp.

To do this, first cut the broken saw blade into eight equal length strips, see Fig. 1. (I cut the strips about 9" long using a pair of tin snips.)

To make it so the rasp works on both the forward and backward strokes, I stacked the blades so the teeth alternated from front to back, see Fig. 1a.

First, epoxy one end of the stack in a file handle, see Fig. 1. Then to hold the blades together at the other end, drill a hole and tighten on a small nut and bolt.

Ted Loughrige
Kansas City, Missouri

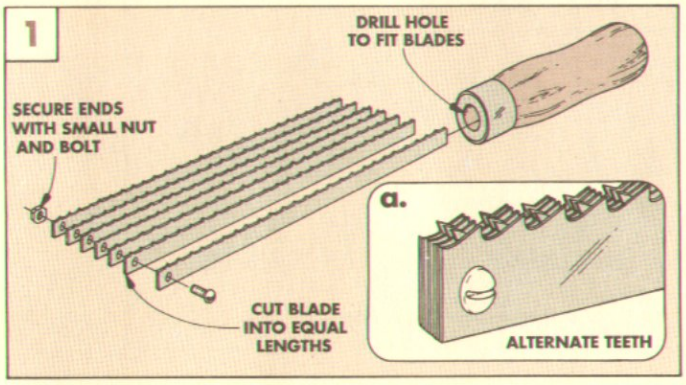

A BETTER GLUE BOTTLE

■ For years I searched for the perfect glue bottle. But during lunch one day my long search ended. I found exactly what I'd been looking for — an empty 8-ounce bottle of French's mustard, see below.

Unlike other mustard bottles, the lid on this one screws off for easy refill. And it's better than most glue bottles because the twist cap can't be misplaced.

I also like this bottle because it's not too big and clumsy to handle. But it's large enough to hold plenty of glue.

Keith Artz
Seattle, Washington

Editor's Note: Good tip. Just be careful not to grab this bottle when you're in the shop with a bologna sandwich.

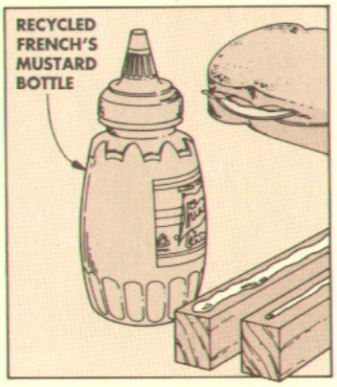

SEND IN YOUR TIPS

If you would like to share an original tip or idea, just send it to *Woodsmith*, Tips and Techniques, 2200 Grand Ave., Des Moines, Iowa 50312.

We will pay (upon publication) $25 to $100, depending on the published length of the tip. Please include an explanation, a photo or sketch (we'll draw a new one), and a daytime telephone number, in case we have some questions.

Shelving Unit

How can you build a Shelving Unit that can be rearranged or taken apart quickly — without being too wobbly? Shelf cleats and thick stretchers with knock-down hardware are the answers.

When designing this shelving unit, I wanted to include a couple of features. First, it had to be adjustable — the shelves should be easy to remove or reposition.

Second, I wanted a "knock-down" unit that would disassemble quickly so it could be moved to another location.

Including these features into the design wasn't as difficult as I thought it might be. The shelves function as "bridges" to hold the two vertical end units together. By cutting grooves in the bottom of the shelves, I can lift them off and position them at any height.

But this design presented a problem. The shelving unit couldn't stand on its own without some sort of brace across the back to add rigidity. But how do you add rigidity without losing the adjustable and knock-down features?

HARDWARE. To make the unit sturdier, I added three removable stretchers. The trick was using the right knock-down hardware — a pair of steel wedges called taper connectors. One wedge slides into the other like a knife in a sheath. (For hardware sources, see page 31.)

To secure the stretchers, just tap down on the stretcher. To loosen, tap up from the bottom. But best of all, the connectors are hidden in a notch on the ends of the stretchers.

WOOD AND FINISH. After figuring out the best design, I made three shelving units — one oak (see photo at right) and two pine units (see back cover). And then I finished each with two coats of General Finishes' Sealacell and Arm-R-Seal (an oil and urethane combination.)

MATERIALS

WOOD PARTS

A	Corner Posts (4)	1½ x 1½ x 78
B	Rungs (26)	½" dowels, 11⅞ long
C	Shelf Cleats (14)	1 x 1¼ x 10⅝
D	Shelf Slats (21)	¾ x 3⅜ x 35½
E	Alignment Pins (28)	⅜" dowels, ⅞ long
F	Stretchers (3)	1½ x 4¼ x 33

SUPPLIES

- (6 pair) Taper Connectors
- (84) #8 x 1¼ Roundhead Woodscrews
- (30) #6 x 1¼ Flathead Woodscrews

CUTTING DIAGRAM

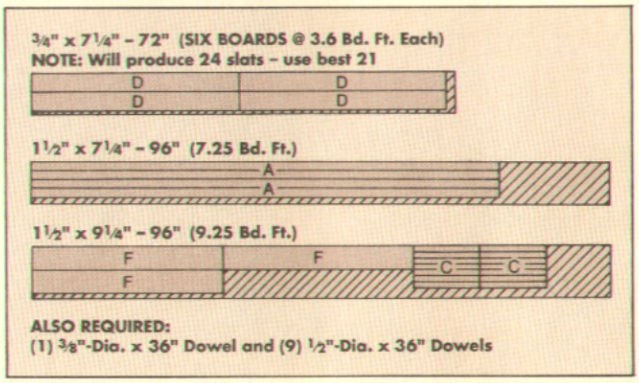

EXPLODED VIEW

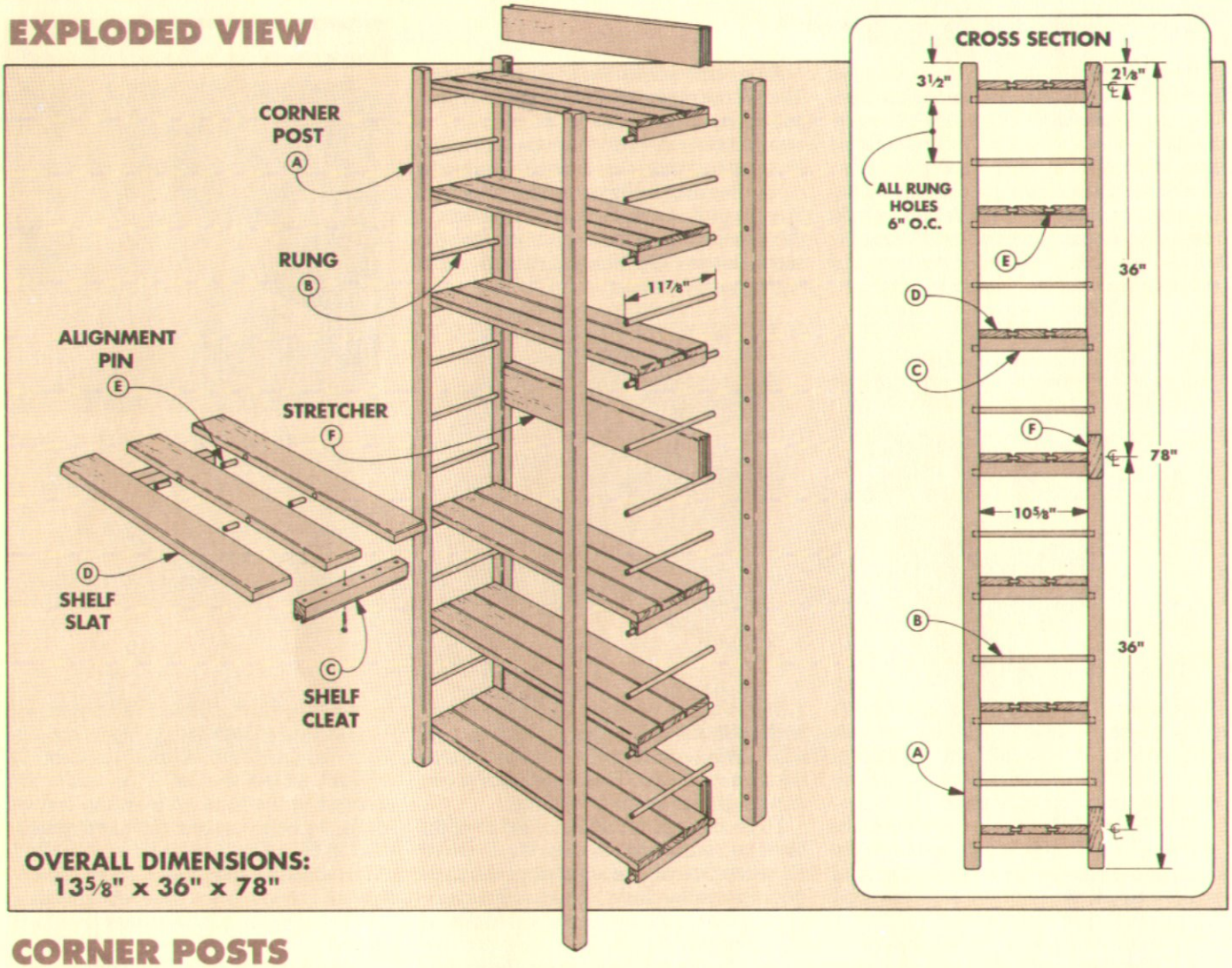

CORNER POSTS

A Shelving Unit consists of two end units, shelves, and stretchers. I began by building the end units. Each end unit looks like a ladder, with rungs and corner posts.

CUT CORNER POSTS. Begin by cutting the square **corner posts (A)** 78" long. (Shop Note: If the posts are warped, the whole shelving unit can lean. So when you're selecting the stock, make sure that you pick out the straightest boards possible for the corner posts. If straight 1½"-thick lumber is not readily available, you could glue together two pieces of ¾"-thick stock.)

LAY OUT RUNG HOLES. After the posts are cut to size, mark the position of the holes for the rungs on the inside face of one post, see Fig. 1. Measure down 3½" from the top end for the first hole, then every 6" for the rest.

With the inside faces of all the posts facing up, use a square to make sure the ends are flush and clamp them together. Then to ensure that the holes will align, transfer the layout lines on the first post to the other three using a square, see Fig. 2.

DRILL RUNG HOLES. The rungs should also line up down each post, so the holes must be centered. To do this, I clamped a fence to the drill press table, see Fig. 3. (Shop Tip: Chamfer the bottom edge of the fence for dust relief, see Fig. 3a.) Then, drill ½"-dia. holes on all four posts.

ROUND OVER EDGES. To complete the corner posts, rout all edges with a ¼" roundover bit. I rounded the ends too. This will prevent any splintering if the unit is dragged across the floor.

(Shop Note: Rout the ends of the posts first. Then if they chip out, routing the edges will clean them up.)

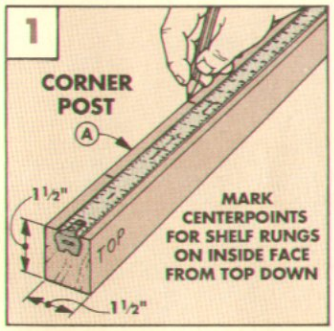

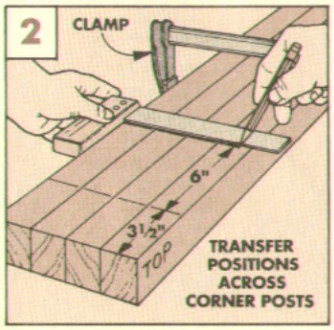

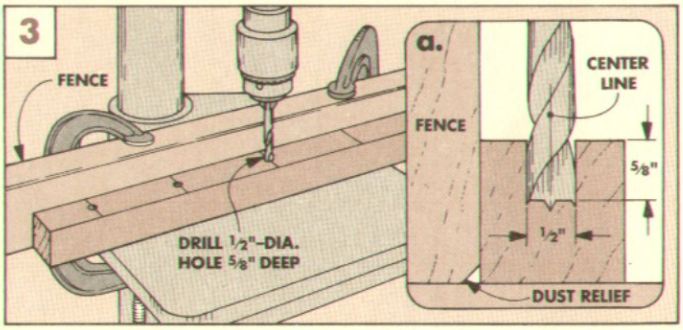

END UNIT ASSEMBLY

After the posts are complete, the next step is to add the **rungs (B)**. They're ½"-dia. dowels cut to a uniform length of 11⅞". To make it easier to insert the rungs, I chamfered the ends of the dowels, see box at right.

ASSEMBLY. To assemble the end units, lay two posts on a flat surface with the top ends aligned across from each other. Then apply a little glue into the holes of one post and spread it around. Now, insert the rungs.

Next, apply glue to the other corner post. Then fit the rungs into the holes of this post, and clamp up the assembly, see Fig. 4.

SQUARING END UNIT. Once the end unit is clamped together, check that it's square by measuring diagonally across the corners. If the diagonal measurements are the same, the assembly is square. If they're not the same, loosen the clamps, rack the unit slightly, and try again.

CHAMFER DOWELS

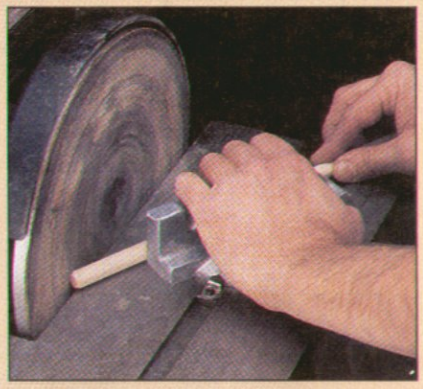

When working with dowels, I usually chamfer the ends. This makes it easier to insert the dowels into the holes. It also allows room for excess glue. To chamfer the dowels I use a disk sander, holding the dowel against a miter gauge with one hand and turning it with the other.

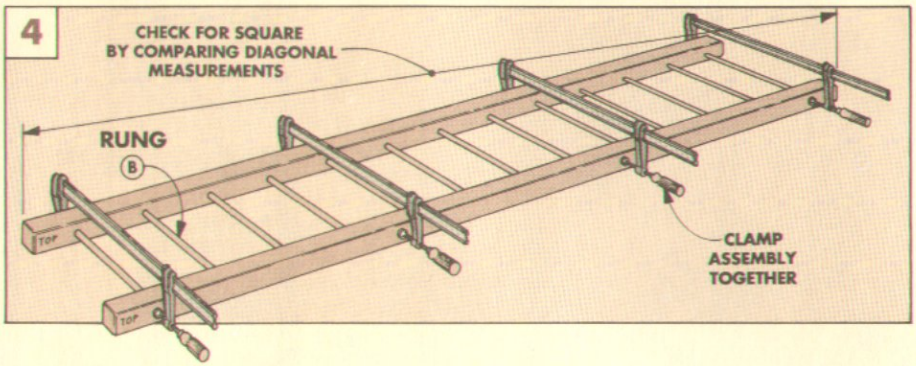

SHELF CLEATS

While the end units are drying, you can begin on the shelves. Each shelf has three slats that are aligned with pins and screwed together from the bottom with cleats, refer to the photo on the opposite page.

The **cleats (C)** determine the width of the shelves. To find their length, measure the distance between the corner posts at several points and use the shortest measurement. (In my case, the cleats are 10⅝" long.)

CUTTING THE GROOVE. After being cut to size, the next step is to cut a centered groove on the bottom of each cleat so it will fit over a rung. It's hard to perfectly center a groove in one pass. So I made two passes with a ⅜" dado blade — turning the cleat end-for-end between each pass. This automatically centers the groove on the workpiece.

To do this, set the rip fence ¼" from the blade and make one pass, see Fig. 5. (Note: To set up the cut, use a test piece the same thickness as the cleats.) Then, without moving the fence, flip the piece and make another pass, see Fig. 6.

Test the fit over a few rungs. If you need to widen the groove, move the fence slightly *towards* the blade. (Note: Two passes will double this adjustment.) When the test piece fits, cut the groove on all the cleats.

DRILL SHANK HOLES. The cleats are screwed to the slats up from the bottom. Mark the holes on one cleat and transfer them to the others with a square, see Fig. 7.

Roundhead screws require both counterbore and shank holes. I drilled a ⅛"-deep counterbore with a ⅜" Forstner bit. Then I used a 3/16" bit for the shank hole, see Fig. 7a.

Now, round over the bottom edges (but not the ends) of each cleat, see Fig. 8.

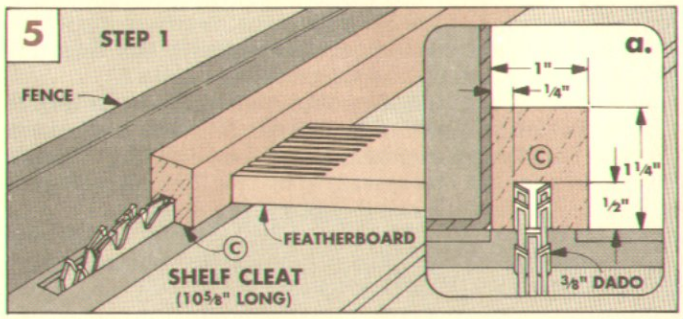

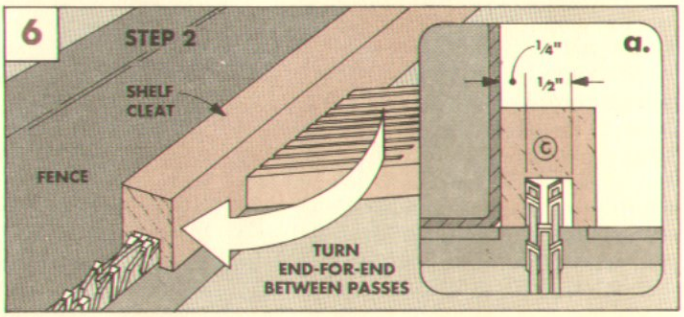

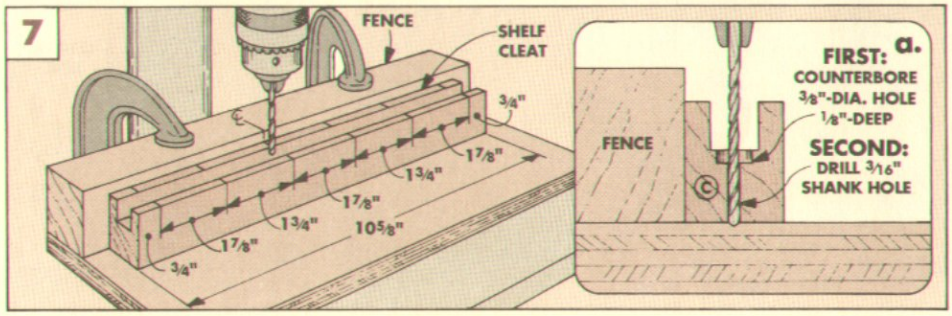

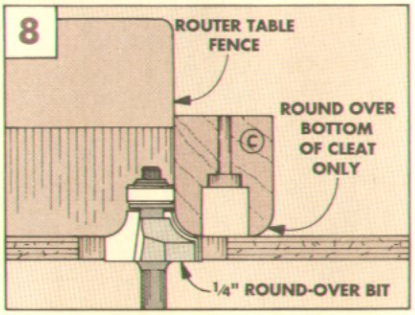

SHELF SLATS & ASSEMBLY

Rather than glue up one wide board, I used three slats for each shelf, see Fig. 9. But this means that the slats need alignment pins to remain flush on top.

CUT SLATS TO SIZE. To begin making the shelves, cut the **slats (D)** to a uniform width and length, see Fig. 9. Then rout a 1/8" round-over on the tops of all the slats.

DRILL HOLES FOR PINS. For the slats to line up, the 3/8"-deep holes for the alignment pins must line up, see Fig. 9. To do this, I clamped two stop blocks to the drill press fence — each 12" from the bit.

Also, to keep the tops of the slats even across the shelf, I always put the top face of the slats against the drill press fence. (Note: You could use a doweling jig.)

CUT PINS. Next cut 7/8"-long **alignment pins (E)** out of 3/8"-dia. dowels. Because there are 28 pins, I made a jig to cut them to uniform length, see Shop Notes on page 17.

ASSEMBLY FORM. To make the assembly of each shelf easy and consistent, I built a form out of 2x2s screwed to a plywood base, see Fig. 10. This form must be square and the slats must fit snug into the form.

SHELF SPACING. With the form built, assemble the three slats and four alignment pins into one shelf and set them into the form. To determine the exact width of the space between the slats, you'll have to use a little trial and error.

Start with 1/4" spacers between each slat and set a cleat across the assembled shelf, see Fig. 10. Check that the end of the cleat is flush with the edge of the shelf. It should be close. If they're not flush, trim the spacers or shim them with tape. When the shelf matches the cleat, clamp it into the form.

ATTACH CLEATS. Next mark the position of the shank holes on the slats with an awl. Then remove the cleats and drill the pilot holes. Finally, to complete the shelf, glue and screw the cleats to the slats.

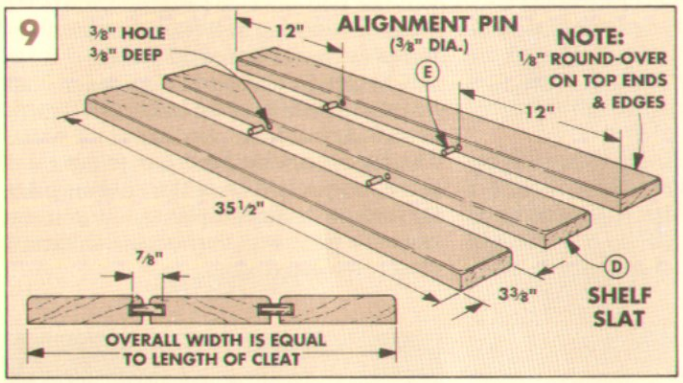

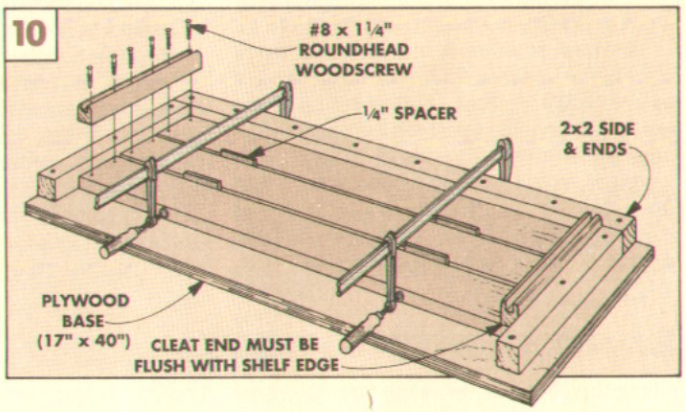

STRETCHERS & ASSEMBLY

Finally, stretchers are wedged between the end units with taper connectors so the shelving unit is kept rigid and straight.

CUT STRETCHERS. To figure the length of the **stretchers (F)**, the shelves must be in place, see Fig. 13. But the shelving unit won't stand by itself yet. So I secured one end unit upright (I clamped it to my bench) and then positioned the shelves.

Now measure the distance between the end units and cut three stretchers to this size. (Note: Don't rip them to finished width yet. Keep them a little wide.)

CUT NOTCH. To hide the connectors, cut a 3/4"-wide notch on the ends of the stretchers, see Fig. 11. At first, I stood them on end while cutting, but this felt awkward. So I clamped a guide block to the stretcher to add support. (You could also use a tenoning jig.)

With notches cut on both ends, rip the stretcher to a width of 4 1/4". Doing this *after* the notches are cut cleans up any chipout. Next, round over both faces, see Fig. 12.

HARDWARE. Now the taper connectors can be mounted. The male wedges are hidden in the notches. The female parts are attached to the insides of the back corner posts. And they're centered on the top, bottom, and middle shelves, see Cross Section in Exploded View on page 7.

To mount the connectors, first mark their location and drill the pilot holes, see Fig. 12. Then, after screwing the connectors down, tap the stretchers into position, see Fig. 13.

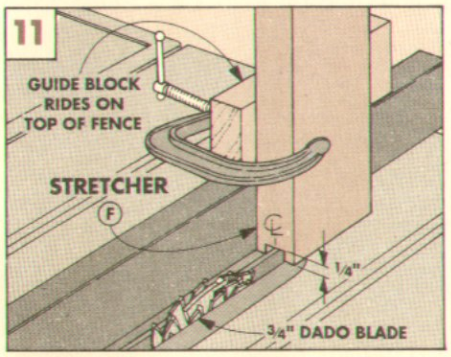

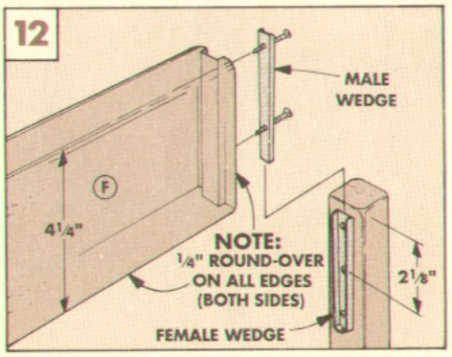

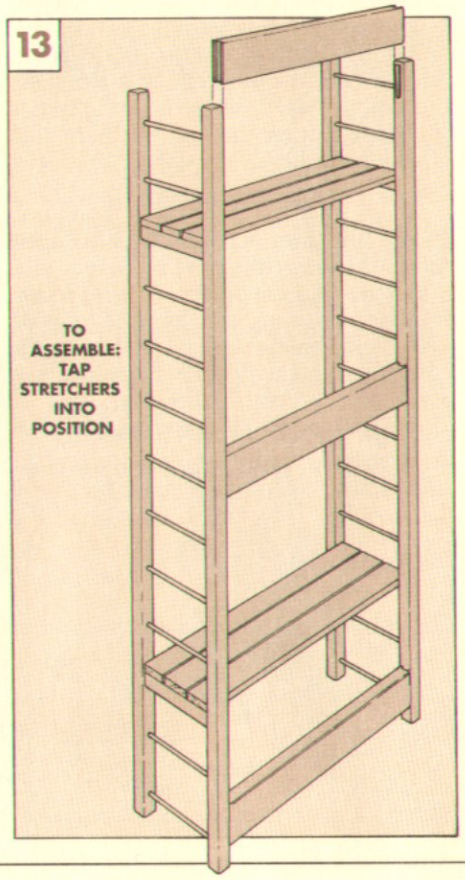

Resawing

Where do you get thin wood? Many projects, such as the Cabinetmaker's Chest on page 20, require thin stock (less than ¾"-thick). Sometimes you can buy thin stock at the lumber yard or through a catalog, but you'll pay a premium price.

The best solution is to make thin stock yourself — resaw a thick piece into two (or more) thinner pieces. This way, the wood costs less, and you get stock the exact thickness (or "thinness") you want.

VISUAL EFFECTS. But resawing isn't just for reducing the thickness of a piece of wood. It's also useful for creating special visual effects. Like building a door panel with "book matched" grain, see the section on page 13.

RESAWING. Resawing is a lot like ripping. You make a straight cut along the length of a board, cutting *with* the grain. But there's a difference. A board that's ripped ends up narrower, while a board that's resawn ends up thinner. It's all in the way the board is positioned while it's being sawn.

To rip a board, it's placed wide face *down* on the table and the cut is made through the thickness. But when resawing a board, it stands on *edge* and is cut through the width, see photo below.

PROBLEMS. Because more material is being removed when resawing, there's a greater chance for problems. The saw blade can burn the wood or bind up. Or, in the case of the band saw, the extra stress can actually cause the blade to bend and drift off a straight line.

But these problems can be avoided by following a few simple set-up procedures and the correct techniques. (Here we're showing the techniques for resawing on the band saw and the table saw.)

AFTER RESAWING. No matter how a piece has been resawn, there's one more step before the thin piece is ready to use. That's because resawing will leave irregular saw marks on the surface of the wood.

A band saw blade will often leave small ridges on the face of the board. And a table saw blade can leave saw marks or burns. The fastest and simplest way to get rid of these marks is to run the resawn piece through a thickness planer. Or you can smooth a piece with the "original thickness planer" — a hand plane.

BAND SAW TECHNIQUE

Given the choice of resawing on a table saw or a band saw, I'll usually use the band saw. There are two reasons for this. First, a band saw blade cuts a thinner kerf than a table saw blade. So there's less waste.

But the most important reason is safety. Since a band saw blade cuts with a continuous *down* stroke, it holds the workpiece to the table during the cut. So there's no chance for kickback like with a table saw.

SETTING UP

Before beginning to resaw, there are a few things to check. Start with the blade.

THE BLADE. I use a wider blade for resawing than for routine band sawing. A ½"-wide blade is stiff enough to hold its shape while cutting through a wide piece of wood. So it won't twist or "barrel" in the kerf.

The teeth on the blade are important too. I resaw using a hook tooth blade with 3 to 6 teeth per inch. With a small number of teeth per inch, the gullets (spaces) between the teeth are wider. Wider gullets allow sawdust to clear the blade, so it can cut cooler and more efficiently.

A note about blade tension. For resawing, I'll add a little *extra* tension to the blade. This way, the blade is less likely to twist and bend.

After you have the correct blade mounted, use a try square to check that the table is 90° to the blade, see Fig. 3.

GUIDE BLOCKS. The next thing to do is adjust the guide blocks, see Fig. 1. It's important to adjust the guide blocks above *and* below the table, see Fig. 2. They're adjusted in two directions.

First, they should be positioned just *behind* the blade gullets, see detail in Fig. 1.

The guide blocks should also be adjusted so they're almost — but not quite — touching the sides of the blade. (Shop Note: I use a dollar bill as a gauge to set this gap.) Set this way, the blocks won't rub on the blade while it's moving. But they still limit *side-to-side* movement of the blade while cutting.

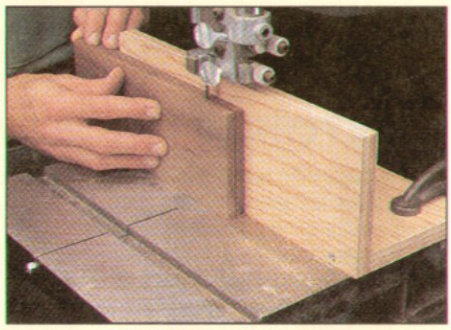

THRUST BEARINGS. Another adjustment to make is to the thrust bearings, see Fig. 2. These prevent the blade from bowing from

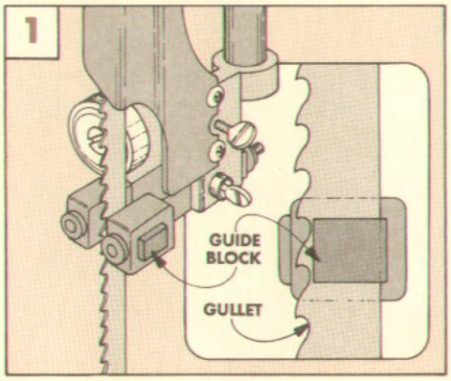

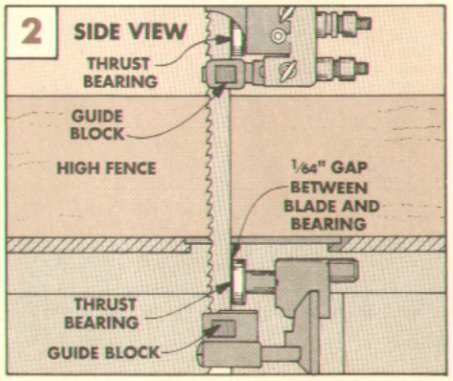

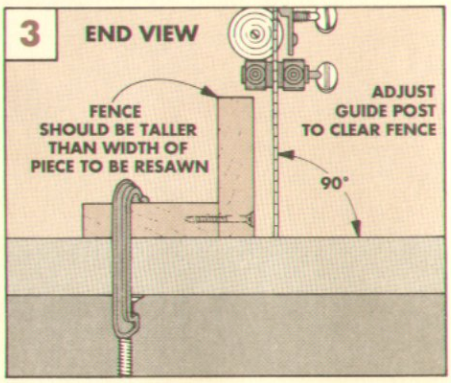

CONTINUED

from *front-to-back*. Adjust both bearings so there's a small gap (1/64") between the bearing and the back of the blade, see Fig. 2.

GUIDE POST. Next, the guide post should be adjusted. To keep the blade as stiff as possible, the post should be raised so it just clears the workpiece and fence, see Fig. 3.

FENCE. After adjusting the band saw, I'll also clamp a high fence 90° to the band saw table, see Fig. 3.

PREPARING THE STOCK

Making the actual cut is the easy part of resawing. But for the most accurate cut, first check the workpiece. Both faces should be perfectly flat, and the edges should be square to the faces.

MEASURE & MARK. To indicate where the blade is to cut, I draw a pencil mark (or use a marking gauge) along the top edge of the piece. This helps to see if the blade is following the intended line of cut, see Figs. 4 and 5.

Shop Note: If the blade does *not* follow this line (if it "drifts" off the line), angle the fence or use a pivot block as a guide, see Band Saw Tips below.

RESAWING

Begin resawing by placing the edge of the board flat on the saw table and feeding it into the blade. Push the board from behind with one hand, and guide it along the side with your other hand, see Fig. 4.

FEED RATE. Now, as you're feeding the board through the blade, keep a couple things in mind. First, feed the board in a slow, continuous motion — *not too fast*. Too much force on the piece can cause the blade to bend or the board to wander. The idea is to let the blade do the work — your hands are just to guide and feed the piece.

LISTEN TO THE BLADE. One other thing. As with many power tools, the band saw has a certain "voice" — it's a constant high-pitched squeal. If the blade slows down, this sound will change. Or, if it starts to squeal too loudly, the blade may be bending.

Either way, it's probably a sign you're pushing too hard. Just remember, let the saw blade do the work — your job is to feed the piece and guide it in a straight line.

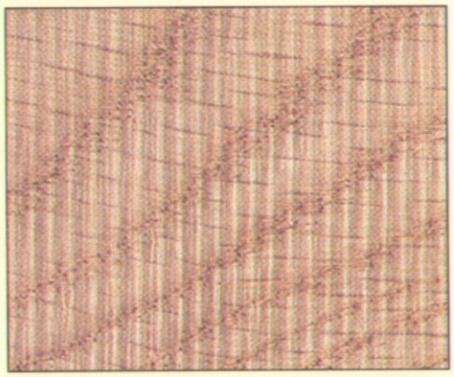

A board that's been resawn on the band saw doesn't usually come off the saw ready to use. That's because the blade will leave small ridges on the face. Use a hand plane or surface planer to smooth off the ridges.

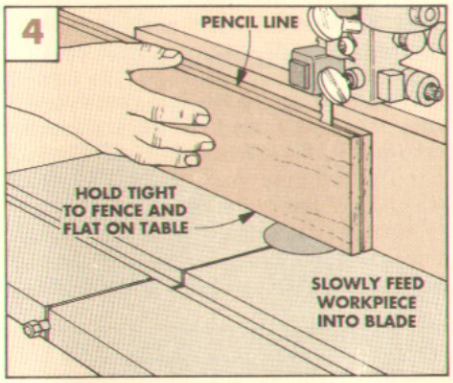

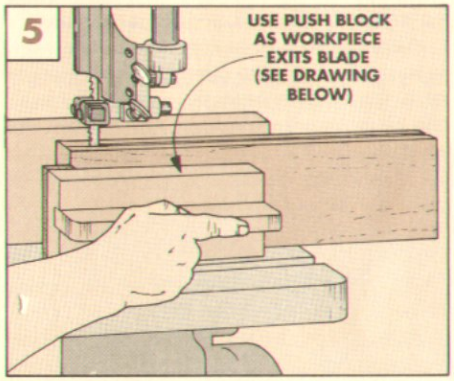

BAND SAW TIPS

PIVOT BLOCK

Resawing with a fence doesn't always produce a straight cut. The problem is the blade can wander and produce an angled cut. In this situation, you can angle the fence — or use a pivot block instead.

A pivot block is just a scrap piece of wood clamped to the table in line with the front of the blade, see drawing below. Cut the front of the block to a V-shaped point.

As the workpiece is fed through the blade, keep one face against the block and pivot the back end on the "V" to follow the pencil line. This compensates for a wandering blade.

GUIDE GROOVES

It's possible to resaw along a straight line without using a fence or a pivot block. The secret is to first cut a pair of "guide grooves" on each edge of the workpiece using the table saw, see drawing.

Rip the shallow grooves using the table saw rip fence as a guide, see detail below. Then finish resawing with the band saw blade tracking in the table saw grooves. This is the "path of least resistance" for the blade.

This technique combines the benefits of the table saw and the band saw — you get a straight cut with no kickback.

PUSH BLOCK

I'm always looking for ways to make resawing safer. When using the band saw, the critical step comes at the end of the cut. All of a sudden the blade breaks through the back end of the workpiece. A shop-made push block makes this safer. And easier.

The push block I use is made from a scrap 1x6 with a handle that's glued into a groove, see drawing. A piece of Masonite glued on the bottom of the block acts like the heel on a shoe to catch the back of the workpiece.

A push block such as this lets you resaw safely — almost like having wooden fingers.

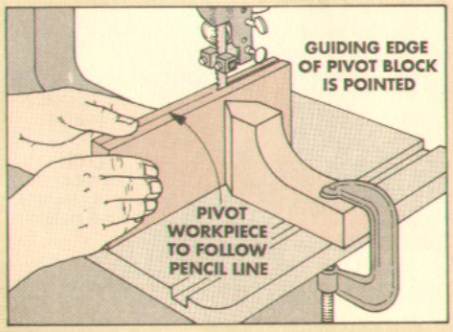

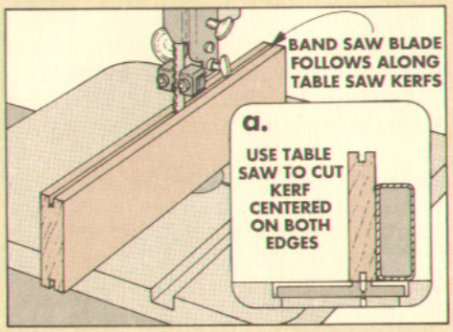

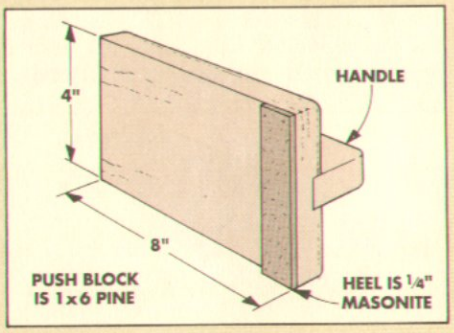

TABLE SAW TECHNIQUE

For resawing, the table saw can do the same job as a band saw. While the results may be the same, there are some big differences.

BLADE. The biggest difference is the blade — a table saw blade is thicker (and stiffer) than a band saw blade. So it doesn't flex as much while cutting. This means it's easier to cut a straight line, see photo at right. But there's a trade-off. Since a table saw blade cuts a wider kerf, there's more waste. And that means you can't get as many thin pieces using a table saw for resawing.

CAPACITY. Narrow boards (less than 2" wide) can be resawn in one pass on the table saw. But wider boards should be cut in two steps. (The blade on most 10" table saws can only be raised to about 3".) That's different than most band saws which can resaw boards wider than 6", and in just one pass.

ORIENTATION. Resawing on the table saw is basically a ripping operation. But instead of the board lying on its *face*, it's fed through the blade standing on *edge*. And like any cut on the table saw, there's always the possibility of kickback. So take the time to set up the saw correctly before you start to cut.

SETTING UP

The first thing I do when setting up to resaw is to install the proper blade.

BLADE. For the smoothest cut with the least amount of heat build-up, it's best to use a rip blade, see Fig. 6. I use a 24-tooth carbide-tipped rip blade. Why not use a thin-kerf saw blade? A rip blade is better because it's thicker, so there's less tendency for the blade to flex while resawing.

Now raise the blade not more than 2½", see Fig. 6. Also, use a try square to check that the blade is exactly 90° to the table.

Shop Note: To help avoid binding and kickback, I use a shop-built replacement insert with a splitter, see Fig. 6 and Table Saw Tips, below.

TALL FENCE. I want as much control over the workpiece as possible when resawing on the table saw. So before making any cuts, I'll attach a tall auxiliary fence to the rip fence, see Fig. 6. This helps keep the workpiece standing up straight during the cut.

SELECTING THE STOCK

Once the fence is mounted to the saw, the next step is to choose the best stock. Try to select stock that's as straight and free of warp as possible.

Even if the board is flat at the start, it will often cup slightly after the initial cut. This will cause the blade to clip the piece at the ends on the final pass, refer to Table Saw Tips, below. I cut each piece about 6" longer than needed so the ends can be cut off after the piece is resawn.

RESAWING

After selecting the stock, I resaw it to a rough thickness about 1/16" thicker than the final desired thickness. (After I finish resawing, I remove the marks left by the blade with a hand plane or thickness planer.)

PUSH BLOCK. Begin resawing by using a thick push block to feed the board through the blade. Shop Note: Use a push block that

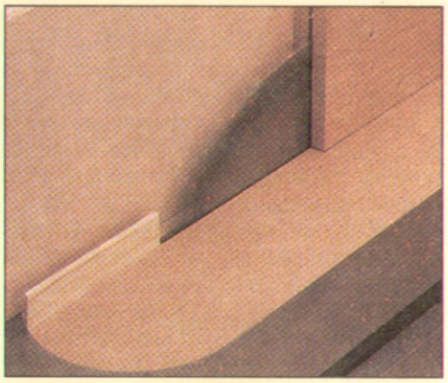

hooks over the back of the workpiece, see Fig. 6. Also, be sure to hold the board tight to the fence. (A featherboard clamped to the saw table can help.)

I usually make the cut in a series of passes. After making the first pass, flip the piece end-for-end (keeping the same face against the fence) and make a second cut on the opposite edge, see Fig. 6.

On stock that's 3" wide or less, try to complete the cut with the second pass. (The fewer cuts the better.) But if the stock is wider than 3", raise the blade in ½" increments and run both edges through the saw a second time. Continue raising the blade in ½" increments until the cut is complete.

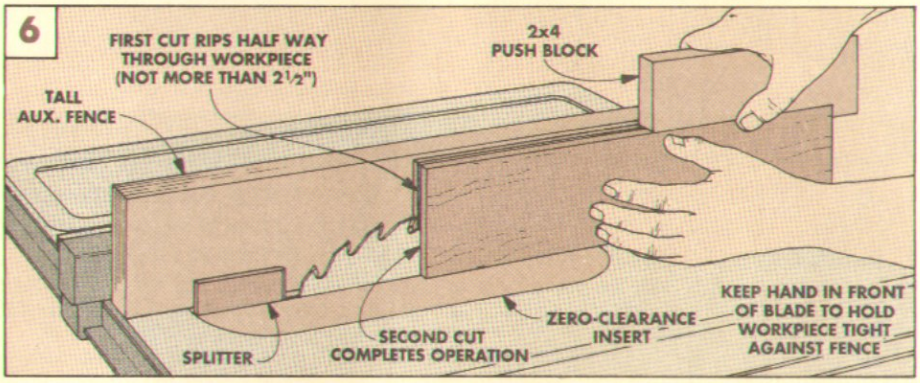

TABLE SAW TIPS

CLIPPED ENDS

When resawing on the table saw, you may experience small ramps at the ends of the resawn piece, see drawing. To solve this, cut the piece about 6" longer than the desired length to begin with, then cut off the ends.

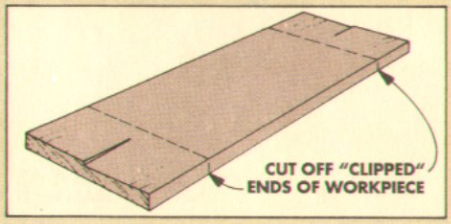

INSERT & SPLITTER

Resawing on the table saw is safer and more accurate with a splitter mounted in a replacement insert. This insert has a thin kerf for the saw blade, and the splitter fits in the kerf to keep the workpiece tight to the fence.

To make a replacement insert, first remove the insert that's in your saw and transfer the outline to a hardwood blank the same thickness. Cut the new insert to this shape, then rip a kerf for the blade about three-quarters of the way through the insert.

Now, cut a splitter to fit the kerf at the *outfeed* end of the insert, and sand the leading edge. Then glue the splitter in the kerf.

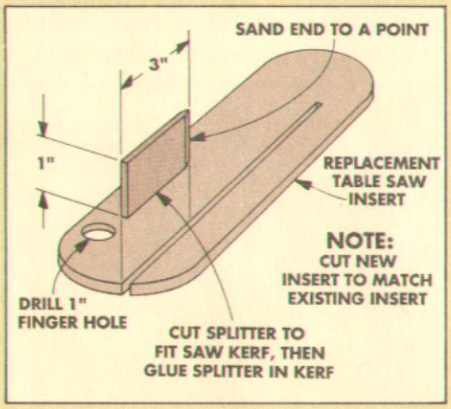

BOOK MATCHING TECHNIQUE

When a piece of wood is resawn, the effect is like opening a book to the middle, see photo at right. Some pieces of wood can be opened to reveal two sides of a symmetrical figure; others will open to a series of parallel lines. It's what's called "book matching," and any board that's been resawn can be reassembled into a book-matched panel.

PROCEDURE. To make a book-matched panel, first resaw the board into two pieces of equal thickness. (Note: If you're resawing more than one board, be sure to keep the "matched" pieces together.)

Now open up the two pieces like a book and look at the grain pattern across the "pages." The effect will vary depending upon which edge is the "spine" of the book.

No matter which way it's opened, the grain pattern will be continuous across the board. The pattern on the left side of the joint line will look like a mirror image of the pattern on the right side.

WOOD SELECTION. Any resawn piece of wood can be book matched. But not every board will produce an *interesting* book match. So to begin with, I try to select a board with an open, figured grain pattern. Or one with other interesting characteristics, such as a burl or a knot on the face.

GRAIN ORIENTATION. When trying to create an interesting book-matched panel, the end grain is the best indicator of the final result. If the annual rings run roughly *parallel* to the intended line of cut, it's probably a piece that will book match with an interesting effect, see drawing and photo below.

But if the annual rings on the end of the board run *perpendicular* to the line of cut (as in a piece that's been quartersawn), the book match will not be as interesting, see drawing and photo at right, below.

BOOK MATCHING TIPS. There are a couple things to keep in mind when book matching. First, the resawn pieces must be planed flat *before* they're glued together. The problem is, after they're glued up, the grain runs in opposite directions on either side of the joint line. So, planing both halves in the same direction might result in chipout.

Also, don't remove too much when planing or the match will change. That's because planing exposes a deeper layer of the grain. So the pattern won't align at the glued edge.

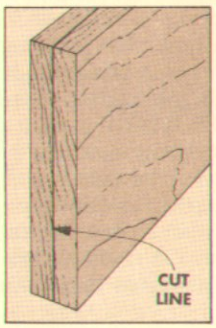

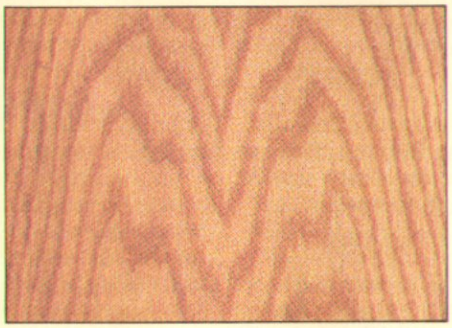

The annual growth rings on the end of a board are a clue to how the piece will look after it's resawn. By resawing roughly parallel to the rings, the most interesting book match can be achieved.

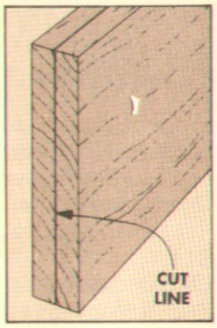

If the blade cuts across the annual growth rings, the resawn pieces can still be book matched, as in the photo at right above. They just won't be as visually striking as the book match example on the left.

END MATCHING TECHNIQUE

Ordinarily when you build a box, it can be assembled so the grain continues around *three* corners. But there's a way to get the grain to continue around all *four* corners. It involves resawing the sides and ends of the box from one piece of wood, see Fig. 1.

The technique is called "end matching," and I try to use it every time I build a box from resawn boards.

STARTING OUT. The secret to end matching is in the way the pieces are cut from the thicker blank. Start out with a board that's the desired length of one box side and one box end *plus* one saw kerf, see Fig. 1.

Now resaw the board to produce two pieces the same thickness.

LAY OUT & CROSSCUT. After the board has been resawn, plane each of the pieces to the same thickness. Then mark an end and a side on the *resawn* face of each piece, see Fig. 1. These will be the *outsides* of the box. Now cut an end and a side from each piece.

CORNER JOINTS. For an end-matched box, I use a miter joint at the corners. This keeps the grain pattern continuous along the joint line, see Fig. 2. For the best match, the miter cuts should just shave the ends of the pieces.

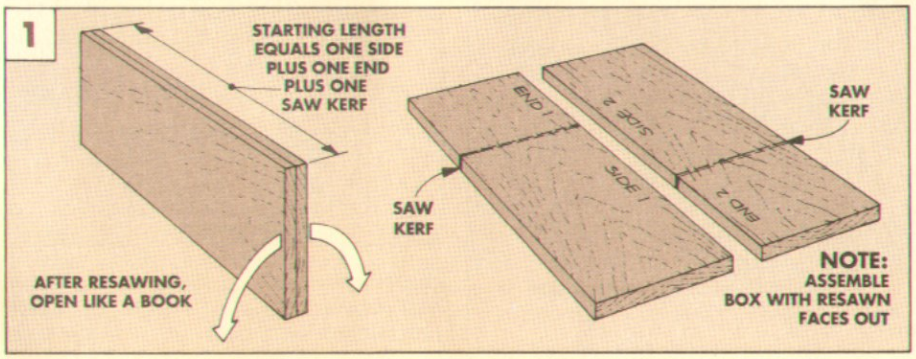

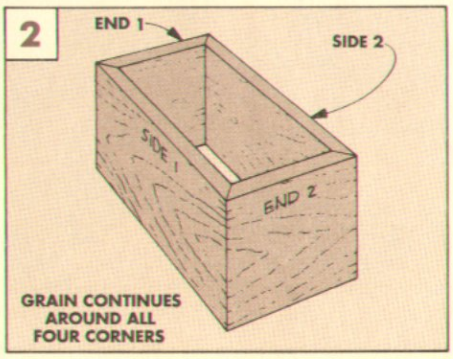

Portable Planer

To buy a thickness planer just a few years ago, you needed at least a $1000 and a forklift. Now you can buy a portable planer for less than $400, and you can carry it away in the trunk of your car.

Portable planers work like stationary planers — they're just smaller. But they can easily handle the requirements of most home shops.

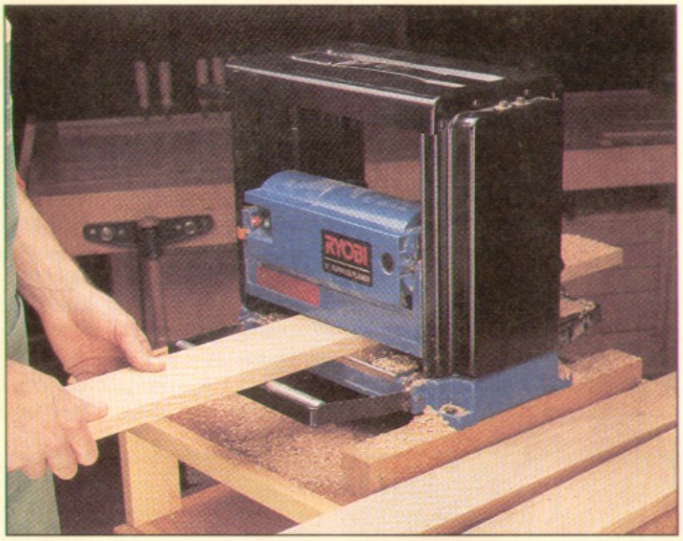

WHAT A PLANER DOES. A thickness planer does a number of things at the same time. It'll smooth a rough face and also reduce the thickness of a board.

But a planer's most useful function is planing a workpiece to a *consistent* thickness across its width and down its length. A jointer or a belt sander can't do this easily. And hand planing requires a lot of concentration and energy.

SPECIFICATIONS. Portable planers are usually specified by the widest board they'll accept — commonly 10" to 12". Though it will accept a 10" or 12"-wide piece, a portable planer is not going to plane 1/8" off a 12"-wide piece of oak in one pass.

Still, a portable planer isn't a toy. It can plane 1/32" off a wide hardwood board — even more off a softwood piece. This can save a lot of time when reducing a stack of boards from 3/4" to 1/2", for example.

PARTS OF A PLANER

Portable planers have four basic parts — a bed, feed rollers, a cutterhead, and a mechanism for adjusting the cutterhead up and down, see Fig. 1.

BED. The bed is a steel plate that the workpiece slides on as it's fed through the planer. Extension wings (one in front and one in back) are usually attached to the bed. They extend beyond the machine to provide additional support to the piece.

FEED ROLLERS. The planer has two identical rollers — one infeed and one outfeed. Both are chain driven to move the workpiece through the machine at a constant rate. You don't have to push, pull, or guide the piece. Just get it started, support the trailing end, and the rollers will take over.

CUTTERHEAD. The rotating cutterhead holds two or more knives. These knives plane chips off the wood. This is different from a hand plane that produces long shavings.

Planing chips instead of shavings doesn't leave ridges as you'd expect. That's because the cutterhead is spinning so fast that the cuts overlap each other. The result is a face that's practically as smooth as one that's been hand planed.

Speaking of chips — the cutterhead throws them everywhere. But not all the

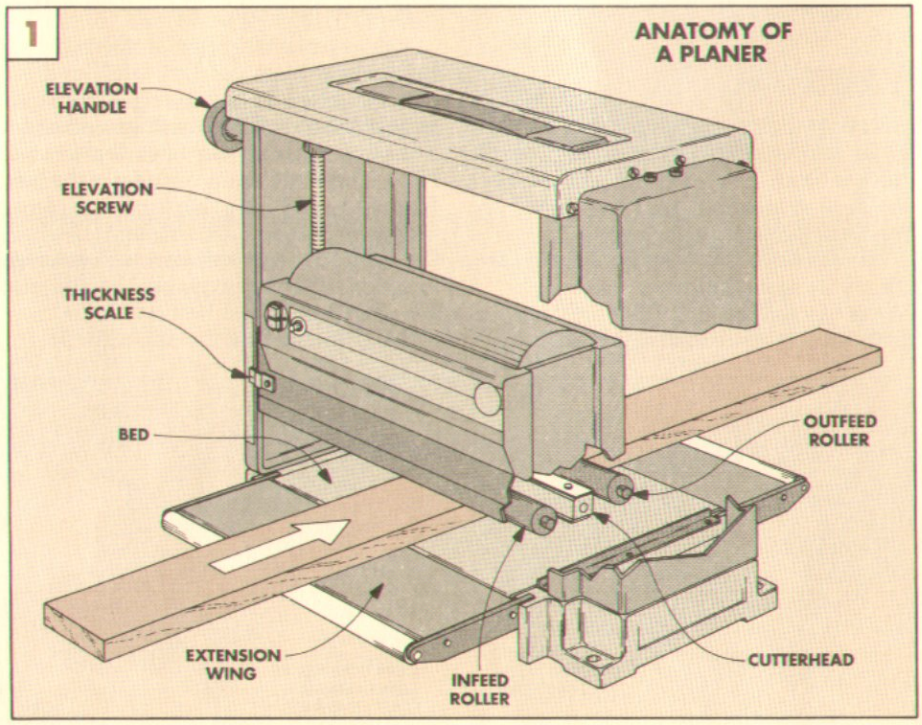

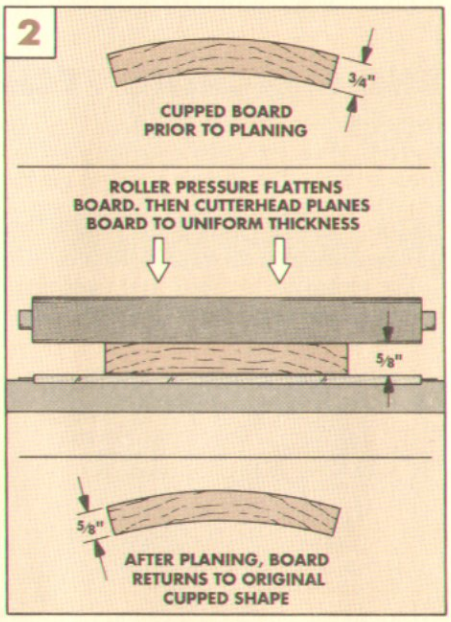

A common misconception is that a planer will remove warp. Actually, the rollers flatten the wood, but the warp springs back.

chips end up on the floor. Some can stick to the rollers and press into the wood causing dents in the workpiece. So it helps to hook up a dust collector or vacuum when running a planer. (Most manufacturers offer a dust collection hood as an accessory.)

DEPTH ADJUSTMENT. The cutterhead isn't usually stationary — it can be raised and lowered. (I say "usually" because on some planers, the *bed* is adjusted.) Whatever the design, the distance between the cutterhead and the bed determines the thickness of the wood *after* planing.

Cranking an elevation handle moves the cutterhead (or the bed). There's a scale that indicates the final thickness of the workpiece, but I'll usually check it myself using a rule or a dial caliper.

To change the height, I set the cutterhead at the thickness of the workpiece. Then depending on the wood, I'll lower it about 1/16" with each pass — even less when the piece is close to the desired thickness.

Shop Note: For quick reference, I made a note of how much a half-turn of the handle changes the cutterhead and taped this to my Ryobi planer.

TIPS FOR PLANING

A planer is handy when there's a stack of boards to plane. You can remove a lot of wood in fifteen minutes. Though it's easy to use, you'll want to keep a few things in mind. For a starter, never stand directly behind a planer. It rarely happens, but a planer can cause kickback just like a table saw.

WARPED STOCK. Also, I always choose the flattest stock that's available. A planer won't flatten a warped or cupped board, see Fig. 2. But oddly enough, it can *cause* cupping.

If you plane just one side of a board, the moisture content of that side will be different than the unplaned side. The freshly planed face will begin to react to the moisture in the air, but the unplaned face will remain stable. This can cause the piece to cup.

How can you prevent this? Flip the board between each pass. Then both faces are planed equally and will react to the moisture in the air the same way.

GRAIN DIRECTION. Cupping isn't the only thing to consider when planing. Even more important is to plane the wood with the grain — not against it, see Figs. 3 and 4.

It doesn't take long before you can *hear* the difference. When a planer is cutting with the grain, it has a steady buzz. It's loud, but consistent. When the planer cuts against the grain, it pops and crackles like a campfire.

Planing against the grain is like rubbing a feather the wrong way. Instead of a smooth face, you end up with chips and tears, see Fig. 4 and photo below. But figuring out which way to plane isn't always obvious.

The best place to look for clues is the edge of the workpiece. The grain should point *away* from the knives — running down towards the planer bed, see Fig. 3. But it's not always so easy. Sometimes the grain direction can reverse itself over the length of a board (like a little kid's stubborn cowlick).

Here you have to make a decision. Which way does *most* of the grain run? Feed the board in this direction and take a light pass. You may still have some chipout, but it should be minimal.

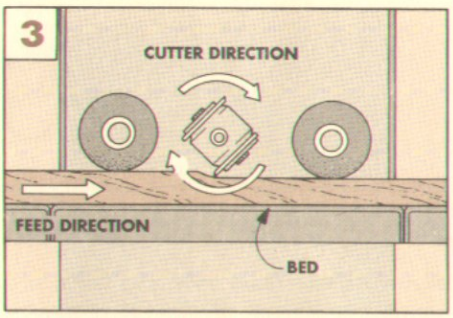

To check grain direction, look at the edge of the board. For a clean, smooth face, the grain must run down towards the bed.

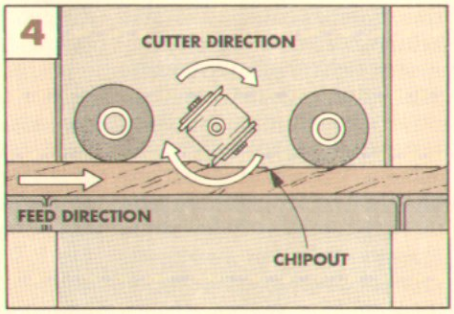

When the grain rises towards the cutterhead, the knives can get underneath the fibers and tear chips of wood out.

One more thing. The center of the cutterhead gets the heaviest traffic. So the knives dull faster in the middle than they do at the sides. I try to wear the knives evenly by feeding the stock at the sides of the planer as often as the middle.

TROUBLE SHOOTING

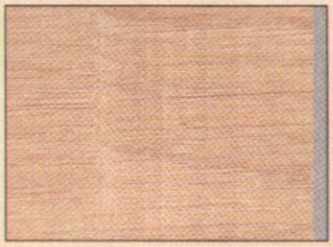

SNIPE

Snipe is a deeper slice planed off the last few inches of a board. As the trailing end passes under the cutterhead, the work is only held down by one roller (the outfeed) so it tips up into the knives.

To avoid snipe, support the work as it exits the planer using your hands or work supports. Or, cut the stock long and trim the sniped end after planing.

CHIPOUT

You can't always eliminate chipout — even if you feed the board with the grain. Knots or "wild" grain that abruptly turns towards the face of the board can cause the wood fibers to tear out.

To minimize chipout, always be sure to feed the wood with the grain, see drawings above. Also, it helps to take lighter cuts, especially on the final pass.

RIPPLES

Occasionally, a board will look and feel "ripply" — like corrugated cardboard. When this happens, the knives aren't set at the same height, so one is cutting deeper than the other.

Most planers include a gauge for installing the knives. But on some planers, the knives align almost automatically — there's no fidgeting and no ripples.

RIDGES

If a planed board has a ridge running down its length, the knives have a nick in them. Nicks can be caused by nails, knots, or a hard object that's been run through the planer.

You can get around this by loosening one of the knives and moving it over about 1/32". This offsets the nicks, so they cancel each other out.

Shop Notes

ADJUSTING DRAWER RUNNERS

■ Any drawer must open and close smoothly, but a flush-front drawer also has a visible gap around all the edges. If the gaps aren't perfectly uniform, the drawer looks sloppy. This was a concern when building the Cabinetmaker's Chest on page 20.

SYSTEMATIC ADJUSTMENTS. When fitting flush-front drawers, it's best to have a system. Instead of haphazardly going about it, I usually start with the top drawer and work down from there. It's easiest to lower the drawers slightly by moving the runners down or trimming off the tops of the runners.

FEELER GAUGE. Another thing I do is to make myself a little feeler gauge out of playing cards, see photo. Standard playing cards are about 1/100"-thick. On the Cabinetmaker's Chest, I wanted about 1/16" gap between drawers, so I used 6 cards.

Using the cards, you don't have to spend a lot of time measuring. Simply run them along the gap to see where they fit too tight or too loose, see photo.

SLOTS. If you need to move a drawer up or down to even the gap, adjustments can be made to the drawer runners.

If you've ever used metal drawer slides, you may have noticed they're usually slotted, see Fig. 1. To adjust them, all you do is loosen the screws, raise or lower the slides, and re-tighten.

If you're using wood runners, you can also mount them using slotted screw holes, see Fig. 2. To do this, first drill overlapping holes near the front and back ends of each runner using a Forstner bit, see Fig. 3. This creates a slotted counterbore. Next, clean up the sides of the slot with a chisel.

Then drill another series of smaller shank holes inside the counterbored holes. Note: Using a Forstner bit for the counterbores will leave centerpoint marks. Use these to center your bit for the shank holes.

Typically, I'd use flathead screws to attach runners. But when the slots are counterbored, I switch to roundhead screws instead, see Fig. 2a.

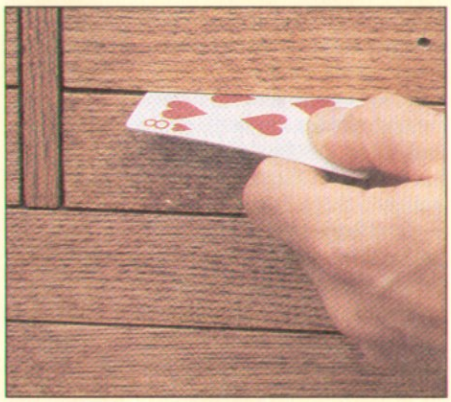

Measuring drawer gaps can really put a strain on the eyes. I use playing cards to detect where the gap is too big or too small.

Now, you can quickly adjust the runners up or down just like a metal slide until the gaps between the drawers are uniform.

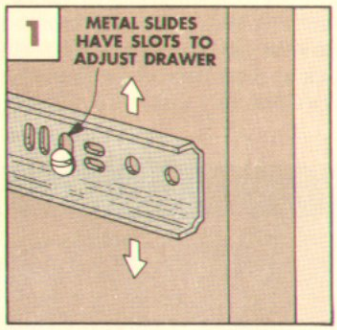

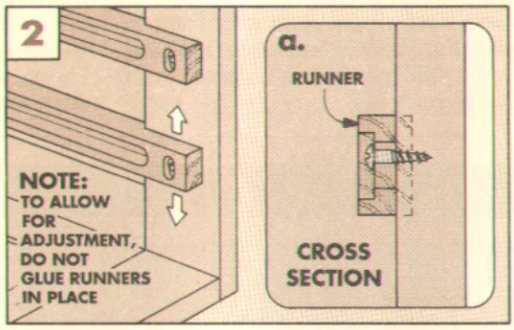

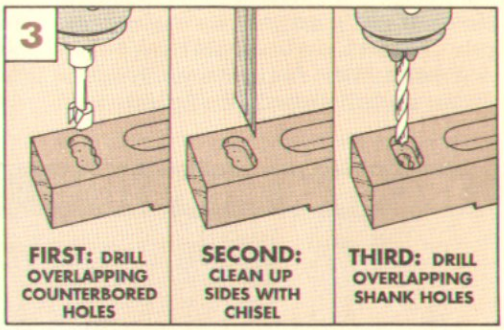

BUYING PINE

■ One myth about building with pine is that it's a lot less expensive than hardwood. But this isn't always the case.

SELECT VS. COMMON GRADE. I built two Shelving Units out of clear C select pine, see the back cover. The total lumber bill for each (including the dowels) was $130. This was almost as expensive as the oak Shelving Unit that's shown on page 6 ($148).

If I had built a unit from No. 2 common pine, the cost would have been about half as much ($74). But the boards would likely have been warped and covered with knots and defects.

So how can you build this project at a reasonable cost and still have it look good? The trick is going through the stack of No. 2 common pine at the lumberyard and picking out the straightest, clearest pieces. Then buy *more* than you need (usually about 20% more), and cut out the worst knots and defects. It will still cost a lot less than the C select pine.

Note: You may not be able to find pine locally for the 1½"-thick parts of the Shelving Unit. Instead, you may have to use fir or spruce for these parts.

COMMON WIDTHS. Whether you buy C select or No. 2 common, pine is usually sold in common sizes (such as 1x4, 1x6, or 1x8). The slats for the shelves are 3⅜"-wide, so I could have used 1x4's (actually 3½"-wide).

But from my experience, 1x4's are not usually straight, and if there is any warp, they won't be wide enough to cut straight. By using 1x8's (7¼"-wide), you can rip two pieces and have an extra ⅜" to work with.

BUY DRY WOOD. One more thing. Only buy pine that's been kiln-dried and try to find a retailer that stores the pine inside.

If you can't find pine that's been stored indoors, let it set in your shop for at least a couple of weeks. Then, if warping occurs because of a change in humidity, you can cut or plane the workpieces straight before you begin your project.

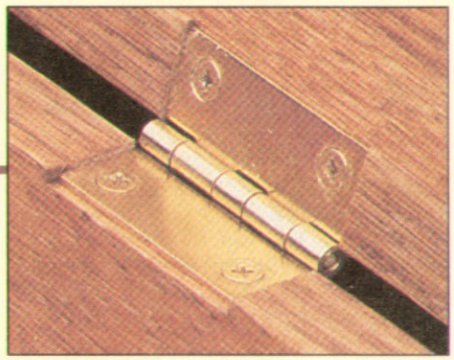

ALIGNING LID MORTISES

■ One of the hardest parts about mounting hinges is cutting the mortises so they align.

When installing the hinges on the Cabinetmaker's Chest on page 20, I used a straight bit to rout the mortises. To align the mortises, I clamped the lid and the case together and routed them both at the same time.

CLAMP LID TO CASE. To begin, I clamped the lid to the case so they were flush across the top, see Fig. 1. To prevent the clamps from marring the tool chest and to give the router more support, I added spacers between the clamps and the chest.

Note: Instead of trying to hold the spacers in place while clamping the lid to the case, I made them wide enough so that when stood on edge, they were flush with the pieces to be mortised.

LAY OUT MORTISES. With the pieces clamped, I measured the width of the hinges and marked layout lines with a square. Then, to prevent chipout, I scored the lines with a chisel.

ROUTER SET-UP. If the hinge flaps sit flush with the surface, the lid and case will have a gap at the back when closed. So I set the depth of the mortise at half the thickness of the hinge barrel. (In my case, about 3/32"-deep.)

To set the bit depth, I routed mortises on scrap pieces and tested the depth with the hinge.

ROUTING MORTISES. With the depth set, I routed freehand between the layout lines, see Fig. 2.

Note: The first pass is a little harder to control because you're routing out the entire width of the bit. So begin in the center and work out towards the lines.

Take lighter passes as you sneak up to the layout lines. Stay at least 1/32" away, and then clean up to the lines with a chisel until the hinge fits, see Fig. 2a.

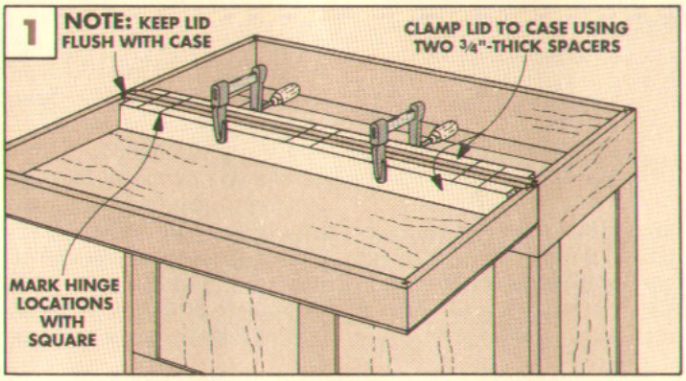

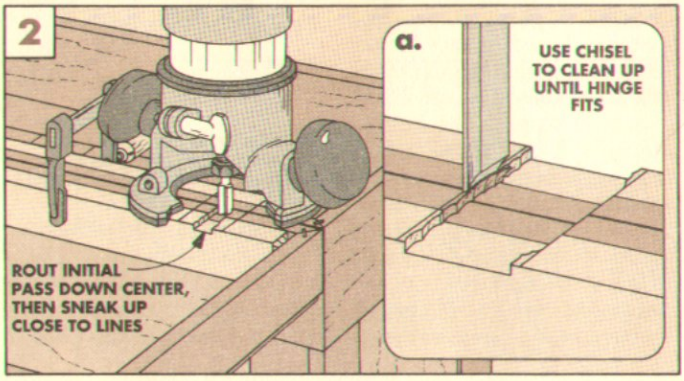

CUTTING SHORT DOWELS

■ Cutting dowels is easy enough. But sometimes you need to cut long dowels into a number of short pieces, and they must be the exact same length. I ran into this when building the Shelving Unit on page 6.

To cut the dowels quickly and accurately, I made a dowel-cutting jig. It's simply a scrap block that holds the dowel and keeps your hands away from the saw blade, see Fig. 1.

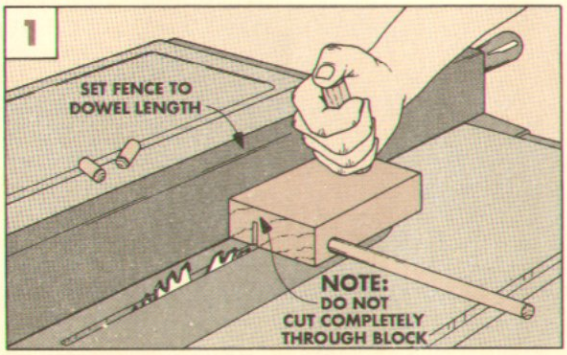

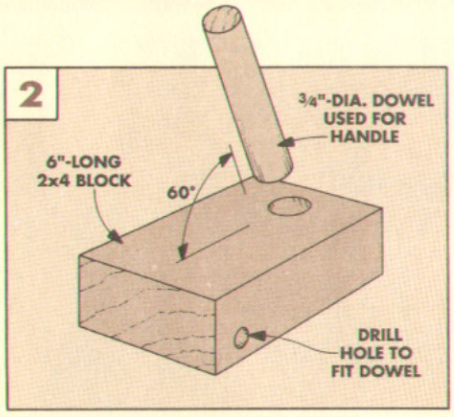

2x4 BLOCK. To make this jig, first cut a 2x4 to a length of 6", see Fig. 2. Then drill a hole through the side of the block to match the diameter of the dowel. Don't drill the hole too big. You don't want the dowel to be loose.

I wanted to keep my hands as far away from the blade as possible, so I added a 3/4"-dia. dowel for a handle.

SET UP AND CUT. To set up for cutting dowels, position your table saw fence so it's the exact distance from the saw blade as needed for the dowels' length. Then raise the blade so it'll cut completely through the dowel but not through the block.

To use the jig, set the block against the fence and feed the dowel through the hole until it stops against the fence. Now, make your cut. Then remove the short piece by pushing it on through the jig.

Note: If you're cutting a long dowel, do not put any pressure towards the blade, or it can bind.

Sanding Table

Dust in the air. It's one of the biggest hazards to working with wood. So when we asked readers (in *Woodsmith* No. 82) to share with us how they deal with the problem of dust collection, we received some interesting solutions.

DUAL-PURPOSE SYSTEM. The winning entry solves two problems: collecting fine dust from sanding, and filtering finer dust from the air. **Ron Vander Wal** of Hudsonville, Michigan submitted a "two birds with one stone" solution. It's a sanding table *and* a shop air filtration system.

Ron's project is a work surface for hand or power sanding. It consists of a plywood box with a motor and used furnace blower inside. Hinged to the top of the box is a pegboard-covered lid.

HOW IT WORKS. The furnace blower pulls air through hundreds of holes in the pegboard sanding surface. Dust particles that get sucked through the pegboard are immediately trapped in one of two furnace filters, see drawing above. The filtered air then enters the blower and is exhausted out the end of the box.

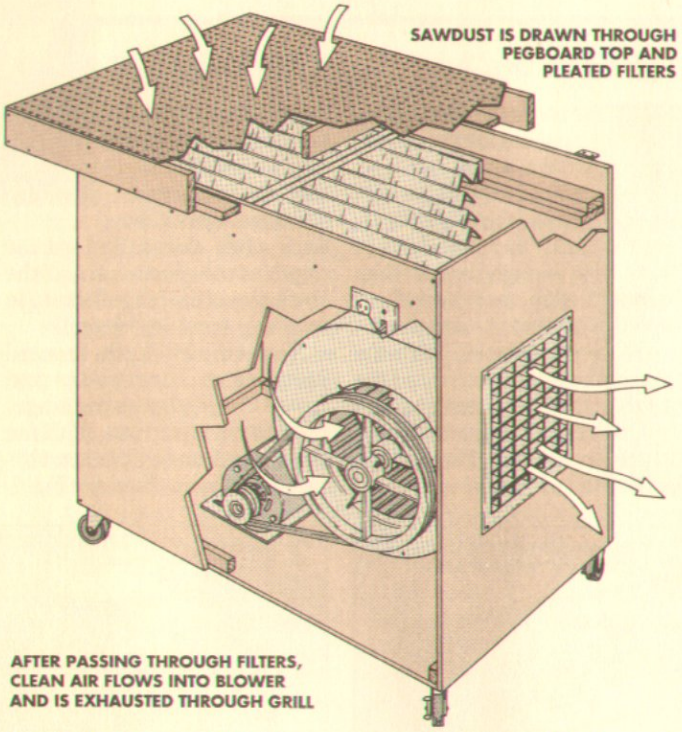

When it's not used as a sanding station, the unit can still be turned on to filter the dust raised by other tools in the shop. It doesn't take a very big blower or powerful motor to clear the air quickly in an average-size shop. (Ron uses a 15"-wide blower powered by a ½ hp motor.)

ASSEMBLY TABLE. An added benefit of Ron's sanding table is that the top can be used as an assembly platform or spare workbench. Used this way, you don't have to turn on the blower. But you can still plug an electric tool into the receptacle on the side, see photos below.

FURNACE BLOWER. The key to this sanding table is the furnace blower. When I decided to build Ron's sanding table for the *Woodsmith* shop, I wondered where I could find a blower and how much it might cost.

As it turns out, used furnace blowers are readily available. Locally, I found a heating and cooling contractor who let me have a motor and blower for no charge — all I had to do was take them off a junk furnace he'd recently removed from an old house.

DESIGN. It's best to have a blower and motor on hand before beginning to build a sanding table like this. That's because the size of these components will determine the exact dimensions of the box, see Building the Table on the facing page.

SANDING TABLE FEATURES

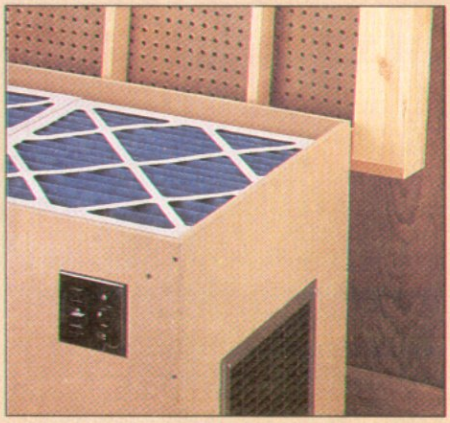

• *Pleated furnace filters can be cleaned or changed by lifting the hinged top. A sander is plugged into the outlet on the side, and a switch turns on the blower. Filtered air is exhausted out the grill on the end of the box.*

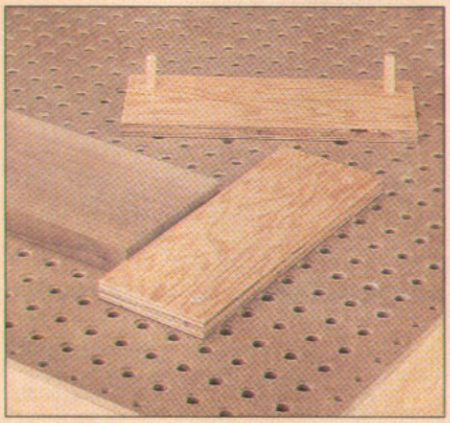

• *Enlarged holes in the pegboard top serve as intake ports for airborne dust particles. The holes can be used to mount a cleat with a pair of dowels. This helps keep a workpiece in position while sanding.*

MATERIALS

A	Box Sides (2)	½ ply - 30 x 40⅛
B	Box Ends (2)	½ ply - 30 x 23½
C	Box Bottom (1)	½ ply - 23½ x 39⅛
D	Bottom Cleat (1)	¾ x 1¼ - 12" (rgh)
E	Filter Rail Bottoms (2)	¾ x 2½ - 39⅛
F	Filter Rail Tops (2)	¾ x 1⅞ - 39⅛
G	Case Frame Fr/Bk (2)	¾ x 1 15/16 - 46½
H	Case Frame Ends (2)	¾ x 3⅛ - 24⅝
I	Lid Frame Fr/Bk (2)	¾ x 3½ - 48
J	Lid Frame Ends (2)	¾ x 3½ - 28½
K	Cross Supports (3)	¾ x 2¾ - 28½
L	Pegboard Top (1)	¼ pegbd - 30 x 48

SUPPLIES

- (1) Furnace Blower & Motor
- (1) Exhaust Grill
- (1) Switch/Receptacle Box
- (2) 2" Butt Hinges
- (4) 3" Swivel Casters (Locking)
- #8 x 1½" & #8 x 1¼" Fh Woodscrews
- (2) 20" x 20" x 2" Pleated Furnace Filters (actual size 19½" x 19½")

BUILDING THE TABLE

This Sanding Table has two main assemblies: a blower box and a sanding top (lid). I built the blower box first, then fit the sanding top to the box.

BLOWER BOX

The blower box is simply a box with an open top. Note: The box should be sized to fit the furnace blower being used. Build it wide enough to allow about 3" to 4" on each side of the blower for unrestricted air movement.

MAIN BOX. The **sides (A)**, **ends (B)**, and **bottom (C)** of the blower box are made from ½"-thick material, see Materials List and Fig. 1. I used medium density fiberboard (MDF) for the sanding table shown here, but you could also use plywood or particleboard.

First glue and screw the sides of the box together. But don't attach the bottom yet.

FILTER RAILS. Next, build the rails that support the furnace filters, see Fig. 2. Each rail is built from two pieces, a **bottom (E)** and **top (F)**. They're glued together to form a rabbet, then screwed inside the box. The rabbets create a ledge to hold the furnace filters, refer to the drawing on the facing page.

Note: The filter rails are sized to accommodate a pair of 20" x 20" (19½" square) pleated air filters with a ⅛" gap, see Fig. 2.

CUT-OUTS. Now mount the furnace blower and motor inside. But first cut an opening on the *end* of the box to fit an exhaust grill for the blower, see Fig. 1.

Next, make a cut-out for an electrical box on the *front* of the box, see Fig. 1. I installed a box that houses a switch for the motor and an outlet for power tools.

BOX BOTTOM. Now cut a notch in the bottom (C) for a power cord, see Fig. 1. Then glue a **cleat (D)** around the inside of the box sides, and screw the bottom to the cleats, see Fig. 1.

SANDING TOP

Now the sanding top can be built to fit the box, see Figs. 1 and 2. The top consists of a case frame (**G** and **H**) lying *flat* that surrounds the top edge of the box. On top of this is a lid frame (**I** and **J**) *on edge* that supports the pegboard work surface, refer to the Materials List.

After assembling the case and lid frames to fit around the top of the box, screw in three **cross supports (K)** that serve as joists for the work surface.

PEGBOARD TOP. Next, screw the **pegboard top (L)** to the top of the lid frame, see Fig. 1.

Ron pointed out something that makes sense to me. He enlarged the holes in the pegboard to ⅜" dia. to increase the air flow into the box, see Fig. 2a.

Now, the top can be attached to the box with a pair of butt hinges. Finally, mount four casters on the bottom of the box.

AIR FILTERS

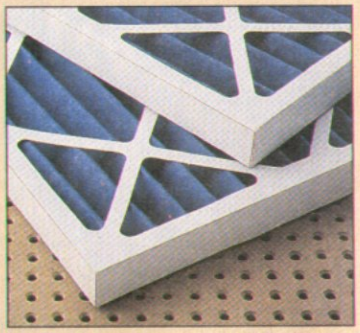

A pleated furnace filter with its cloth-like material is better than a fiberglass filter at trapping small particles of dust. The "wavy" pleats have a larger surface area.

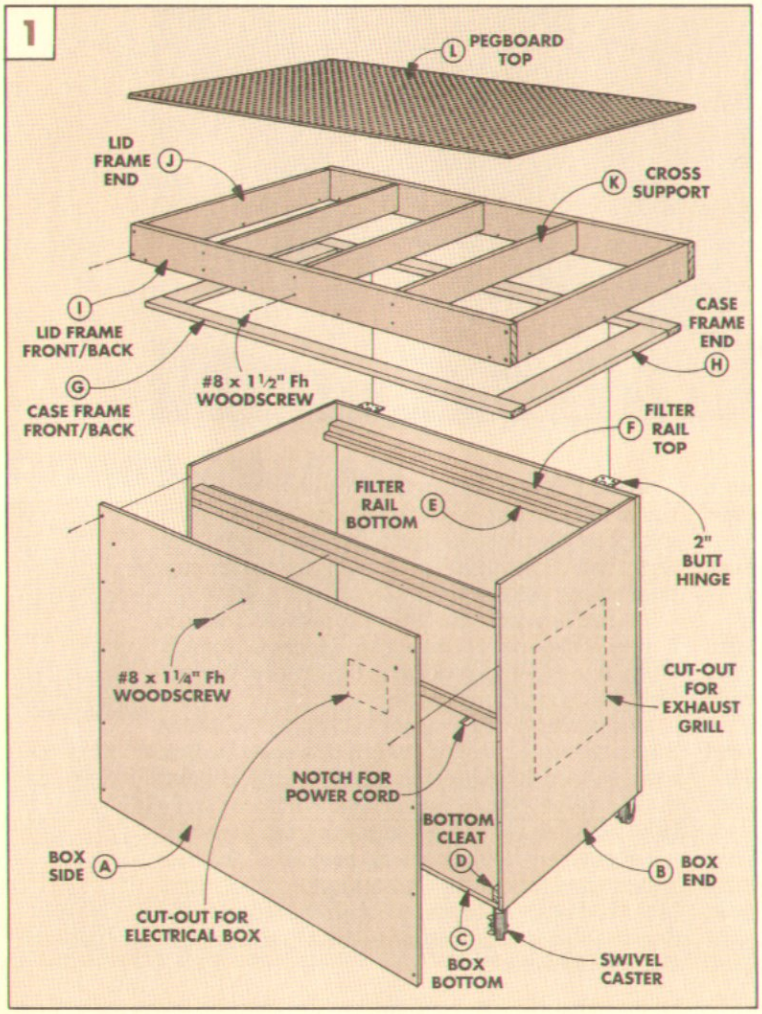

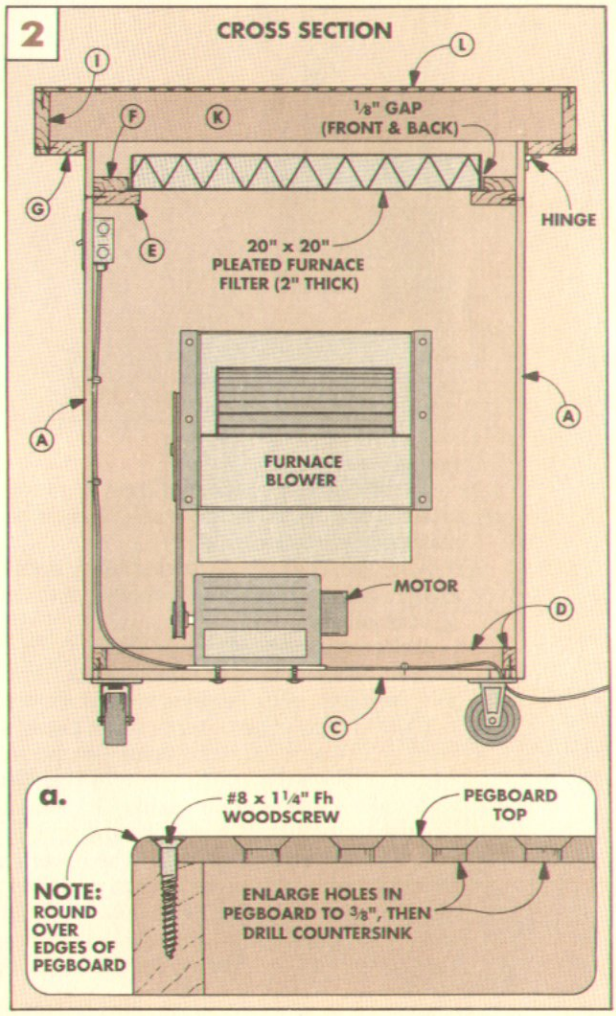

Cabinetmaker's Chest

This tool chest has a drawer for just about any size hand tool. There's even a storage compartment below the lid with a unique locking system to keep all the drawers closed.

This Cabinetmaker's Chest is more than a storage place for fine tools. It's also a showcase for fine craftsmanship.

The main case is constructed using solid red oak frames and oak plywood panels with stub tenon and groove joinery.

It also uses solid red oak for the top panel. But this created an interesting design problem. How do you join the top panel to the sides and still allow the solid oak top to expand and contract with changes in humidity? The solution was a unique frame and panel joint that allows the wood to move without breaking the case apart. (For more on this joint, see page 24.)

CASE ON A CASE. The tool chest is actually a case glued on top of another case. The lower case has seven drawers in different sizes to store and protect smaller hand tools such as chisels, files, and layout tools. The upper case is a deep storage compartment for larger tools — maybe a collection of hand planes.

WOOD & FINISH. To keep the weight of the chest to a minimum, I used ½"-thick stock for all of the parts except for the plywood panels and drawer bottoms. (For more on resawing and planing stock to thinner dimensions, see the articles on pages 10 and 14.)

To give the chest the look of an antique, I stained it with Watco Danish Oil Finish (Medium Walnut). Then, as a top coat, I wiped on two coats of General Finishes' Royal Finish (Satin).

HARDWARE. If you've spent the time to build such a beautiful tool chest, it's worth it to spend a little extra money for some fine hardware. Solid brass drawer pulls, hinges, handles, lid supports, and a lock. For sources of all this hardware, see page 31.

I should mention something here about the neat system used to keep the drawers locked. It's a pair of brass rods that slide into slots on the sides of the drawers — a practical solution for a functional and beautiful tool chest.

EXPLODED VIEW

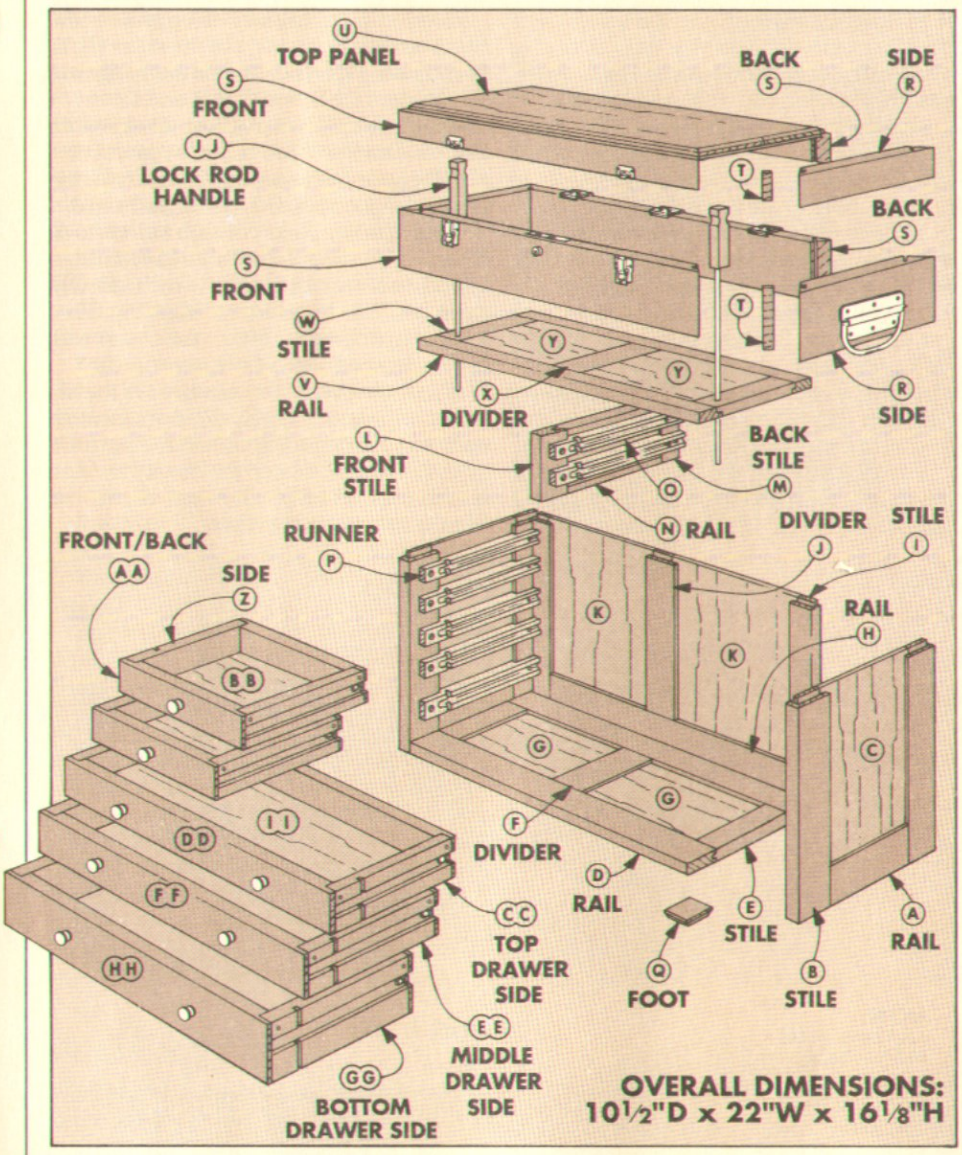

CUTTING DIAGRAM

½" x 6" - 60" (TWO BOARDS @ 2.5 Sq. Ft. Each)

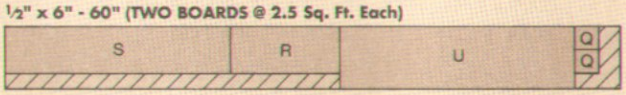

½" x 6" - 64" (2.7 Sq. Ft.)

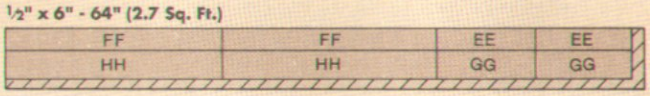

ALSO REQUIRED:
48" x 48" SHEET OF
¼" OAK PLYWOOD

½" x 7½" - 84" (4.4 Sq. Ft.)

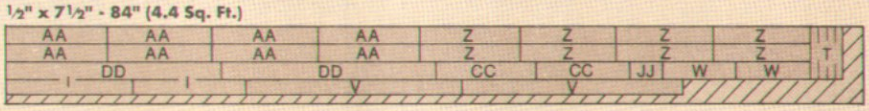

½" x 7" - 84" (4.1 Sq. Ft.)

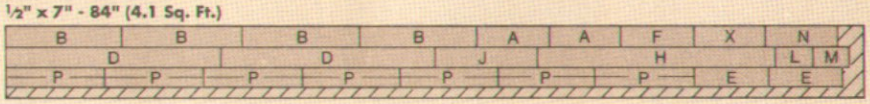

MATERIALS

LOWER CASE

SIDE FRAME		
A	Rails (2)	½ x 2 - 7
B	Stiles (4)	½ x 2 - 11⅜
C	Panels (2)	¼ ply - 7 x 9⅝
BOTTOM FRAME		
D	Rails (2)	½ x 2 - 21
E	Stiles (2)	½ x 1½ - 6½
F	Divider (1)	½ x 2 - 6½
G	Panels (2)	¼ ply - 8½ x 6½
BACK FRAME		
H	Rail (1)	½ x 2 - 18½
I	Stiles (2)	½ x 1½ - 11⅜
J	Divider (1)	½ x 2 - 9⅝
K	Panels (2)	¼ ply - 8½ x 9⅝
CENTER SUPPORT FRAME		
L	Front Stile (1)	½ x 1¾ - 3⅝
M	Back Stile (1)	½ x 1½ - 3⅝
N	Rails (2)	½ x ⅜ - 7
O	Panel (1)	¼ ply - 7 x 3⅜
RUNNERS & FEET		
P	Runners (14)	7/16 x ¾ - 9½
Q	Feet (4)	¼ x 1⅞ - 1⅞

UPPER CASE

STORAGE COMPARTMENT		
R	Sides (2)	½ x 4⅝ - 10½
S	Front/Back (2)	½ x 4⅝ - 22
T	Splines (4)	⅛ x 3⅞ - ½
U	Top Panel (1)	½ x 10¼ - 21¾
BOTTOM FRAME		
V	Rails (2)	½ x 1½ - 21
W	Stiles (2)	½ x 1½ - 7
X	Divider (1)	½ x 2 - 7
Y	Panels (2)	¼ ply - 8½ x 7

DRAWERS

HALF-WIDTH DRAWERS		
Z	Sides (8)	½ x 1¾ - 9½
AA	Fronts/Backs (8)	½ x 1¾ - 10⅛
BB	Bottoms (4)	¼ ply - 9 x 9⅜
FULL-WIDTH DRAWERS		
CC	Top Drwr. Sides (2)	½ x 1¾ - 9½
DD	Top Drwr. Ft./Bk. (2)	½ x 1¾ - 20⅞
EE	Mid. Drwr. Sides (2)	½ x 2¼ - 9½
FF	Mid. Drwr. Ft./Bk. (2)	½ x 2¼ - 20⅞
GG	Btm. Drwr. Sides (2)	½ x 2¾ - 9½
HH	Btm. Drwr. Ft./Bk. (2)	½ x 2¾ - 20⅞
II	Bottoms (3)	¼ ply - 9 x 20⅛
JJ	Lk. Rod Handles (2)	½ x ½ - 2½

SUPPLIES

- (28) #6 x ½" Fh Woodscrews
- (2) #8 x 1½" Fh Brass Woodscrews
- (2) ⅛" x 12" Brass Rods
- (14) ¼" x ⅜" Brass Bullet Catches
- (10) ½" x ⅜" Brass Drawer Knobs
- (1) Brass Lock w/Catch Plate & Key
- (3) 1 1/16" x 1¼" Brass Hinges
- (2) 4 3/16" Brass Lid Supports
- (2) 1¼" x 2¼" Brass Snap Catches
- (2) 4¾" Brass Handles
- Felt Lining for Drawers (Optional)

LOWER CASE FRAMES

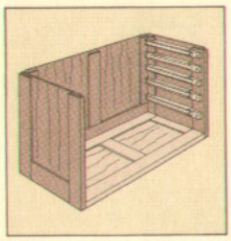

I started on the Cabinetmaker's Chest by building the lower case. It's an open front box with frame and panel sides, bottom, and back.

RAILS & STILES. A framed panel normally has two rails and two stiles. But on this project the top rail was left off from the lower case back and side frames, refer to Exploded View on page 21. This way, the upper case of the chest takes the place of the top rails.

Start by cutting five pieces of ½"-thick stock to finished width (2") and lengths for the **side rails (A)**, **bottom rails (D)**, and **back rail (H)**, see Fig. 1.

Then cut the eight **stiles (B, E, I)** to finished size, see Fig. 1.

DIVIDERS. To strengthen the bottom and back frames, I added a divider in each frame. To do this, cut the **bottom** and **back dividers (F, J)** to finished width and lengths.

CENTER SUPPORT. After cutting the frame pieces, there's one more frame and panel unit to make — it fits *between* the top four drawers, refer to the Exploded View.

To build this center support, cut the **front stile (L)** and **back stile (M)** to finished dimensions from ½"-thick stock, see Fig. 2.

The **rails (N)** for the center support are cut differently. Because they're so narrow (⅜"), it's safer to start with an oversize blank, see Fig. 3. (Cut the blank to a finished length of 7".) Later, after the grooves and tenons are cut, the rails are ripped to width.

JOINERY. After all the frame pieces have been cut to finished size, work can begin on the stub tenon and groove joinery.

I started by cutting a ¼"-deep groove centered on the *inside* edge of the stiles (B, E, I) and rails (A, D, H), and on *both* edges of the dividers (F, J), see Figs. 1 and 1a.

Then cut a ¼"-deep groove centered on the *inside* edge of the center support stiles (L, M) and on *both* edges of the blank for the center support rails (N), see Figs. 2 and 3.

STUB TENONS. Next cut stub tenons to fit the grooves. Shop Note: To avoid confusion, it helps to first mark the end of each stile and rail that will be tenoned, see Figs. 1 and 2.

Now rip the **rails (N)** for the center support to finished width (⅜"), see Fig. 3.

CUTTING PANELS. To measure for the six frame **panels (C, G, K, O)**, dry assemble each frame, refer to Figs. 1 and 2. Then from 1/4"-thick plywood cut the panels to fit all the frames. Finally, glue and clamp the frames and panels together.

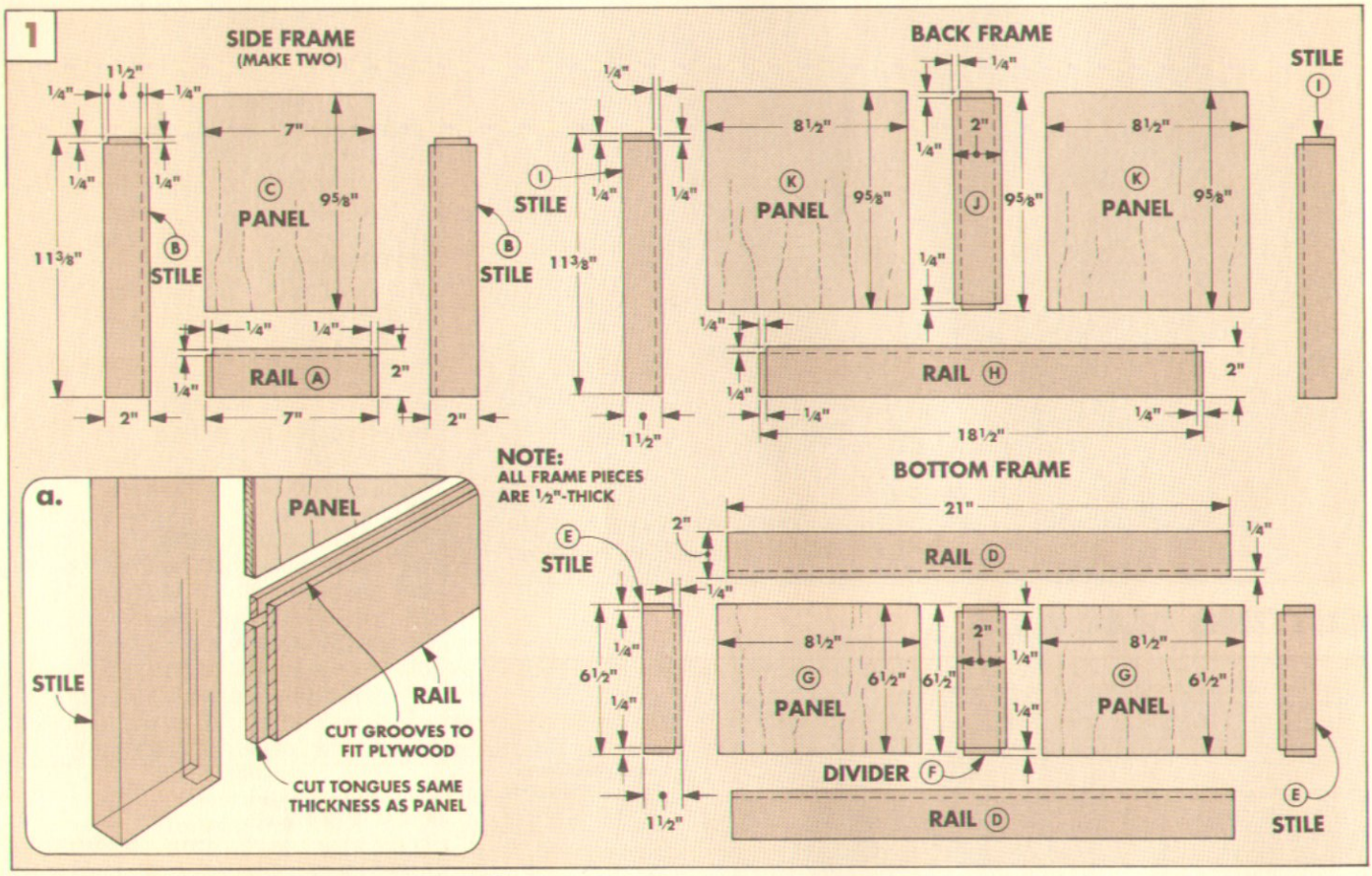

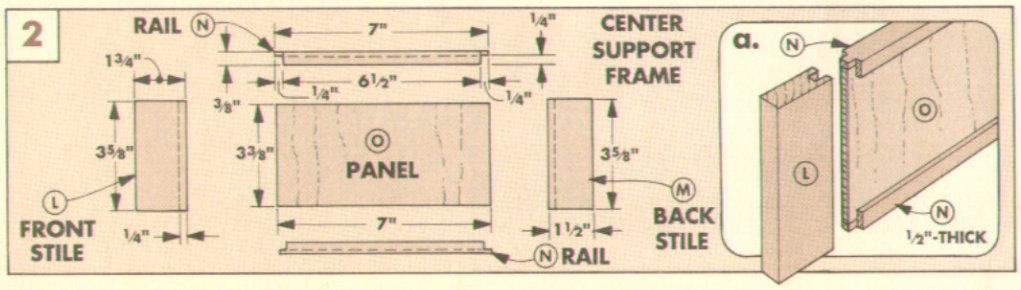

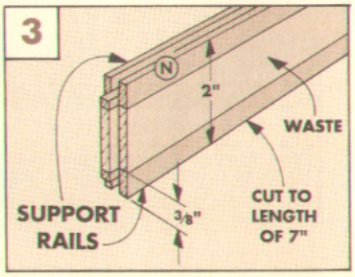

RUNNERS

The drawers for this chest ride on runners screwed to the side frames. But the runners are a little unusual. In addition to guiding the drawers, they also have a V-groove channel routed in them. This channel is for a bullet catch that offers some resistance so you don't pull the drawers out too far. There's also a small slot for a locking pin that keeps the drawers closed.

CUTTING RUNNERS. To make the **runners (P)**, start by cutting fourteen strips to final width and length, see Fig. 4. (I used ½"-thick stock that was resawn to a thickness of 7/16".)

V-GROOVES & SLOTS. To accommodate the bullet catches, rout a 3/16"-deep V-groove on the inside face of each runner. Note: Stop the V-groove 1" from the front of the runner.

Now cut a 3/16"-wide slot for a locking pin near the front end of each runner, see Fig. 4.

RABBETS. The runners are screwed to the inside of the case frame. To fit the runners between the stiles, cut two rabbets on the back face of each runner, see Fig. 5.

MOUNTING HOLES. Now drill countersunk shank holes for screws near the ends of each runner, refer to Fig. 4. Note: To prevent the back screws in the center support runners from hitting each other, I drilled an extra hole in two of the runners, see Fig. 6.

ALIGNMENT BLOCK. Then to ensure all the drawers are level (with an even gap between the fronts), the runners must be positioned directly across from one another. To align them, I made an alignment block, see Fig. 7.

Note: When screwing down the runners, make sure the shoulder of the stiles are flush with the alignment block, see Figs. 7 and 8.

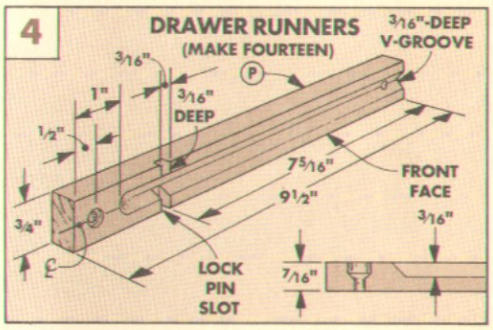

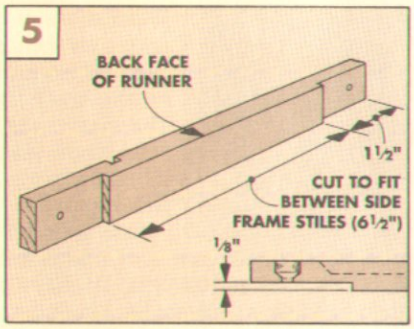

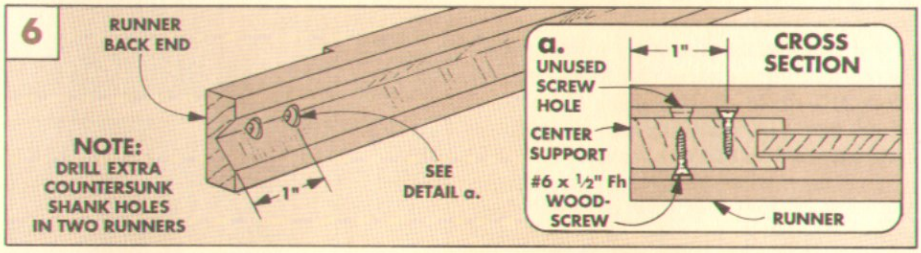

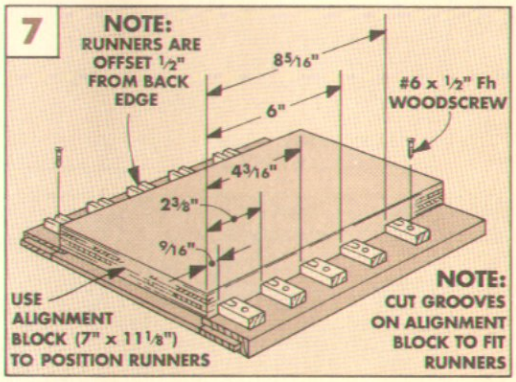

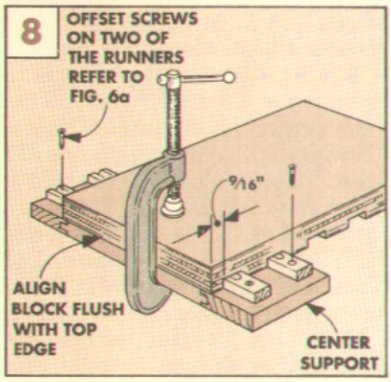

ASSEMBLY

After the drawer runners are screwed in place, the lower case can be assembled.

SIDES & BOTTOM. To do this, first stand the side frames on a flat surface with the *front* edge facing down, see Fig. 9. Then place the bottom frame between the sides, making sure the frames are flush at the bottom, see Fig. 9a.

Next, to keep the frames positioned, cut two temporary spacers to fit between the bottom runners and the bottom frame, see Fig. 9a. (I cut my spacers 1 9/16" wide.)

Now glue and clamp the side and bottom frames into a U-shaped assembly. Once the clamps are in place remove the temporary spacers, see Fig. 9a.

BACK. After the glue is dry, remove the clamps and place the assembly in its upright position. Then glue and clamp the back frame *between* the sides, see Fig. 10.

FEET. Now the four **feet (Q)** can be glued in place (note grain direction), see Fig. 11. For these I used ¼"-thick stock and routed a ⅛" chamfer along all four edges.

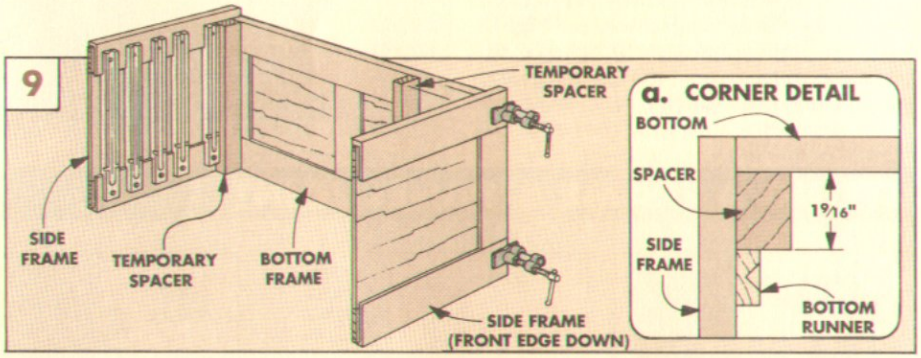

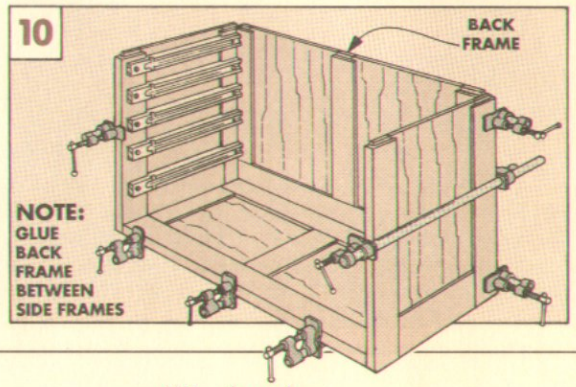

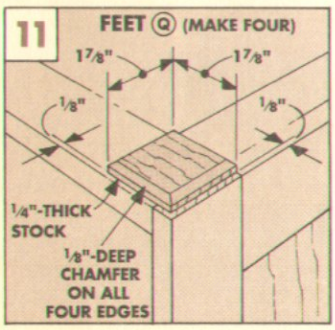

UPPER CASE

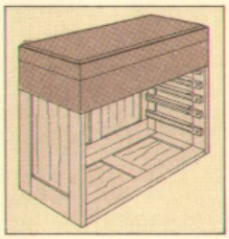

While the glue was drying on the lower case, I began work on the upper case. The upper case has solid wood sides, a lid, and a frame and panel bottom.

One approach to making an upper case with a lid is to first build the case and then the lid. But rather than building a separate lid, I built the unit as a box. Then I cut off the lid so it fit the lower case perfectly.

CUT THE PIECES. Begin by cutting four blanks for the case **sides (R), front (S)**, and **back (S)** from ½"-thick stock to finished width (see Fig. 12a) and *rough* length (a little longer than the lower case).

To fit the tenons and plywood panel on the top edge of the lower case, cut a ¼"-deep groove centered along the *bottom* edge of the two side pieces and the back piece, see Fig. 12. Note: Don't groove the front piece—it doesn't fit on tenons.

There's also a second groove to cut—this time on the top inside face of all four case pieces to accept a top panel. (This is actually the first step in cutting the frame and panel joint for the top panel, see box below.)

SPLINED MITERS. Now the four **upper case pieces (R, S)** can be mitered to finished length to fit the lower case, see Fig. 12. To determine how long to cut these, measure across the lower case sides and back.

Then once the pieces are mitered, cut a groove across the ends for a spline that reinforces the miters, see Figs. 13 and 14.

After that, cut four **splines (T)** to thickness so they fit in the grooves, see Fig. 13. Then cut the splines to fit *between* the groove for the top panel (U) and the groove for the lower case, see Fig. 14.

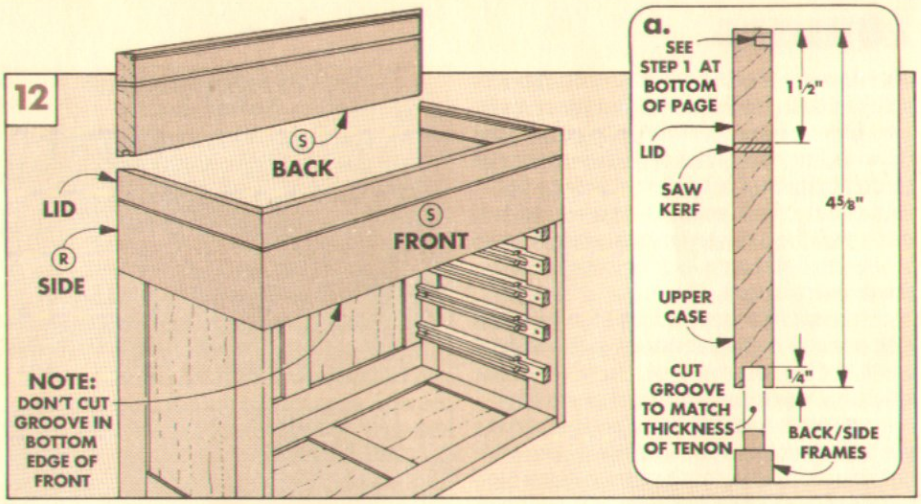

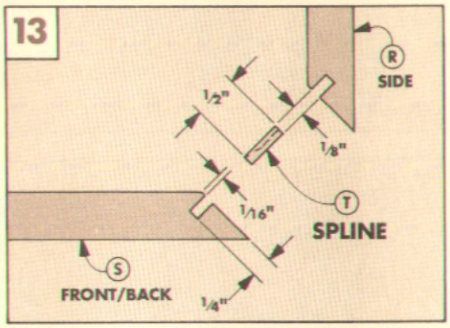

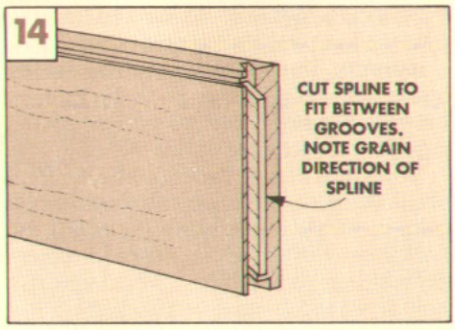

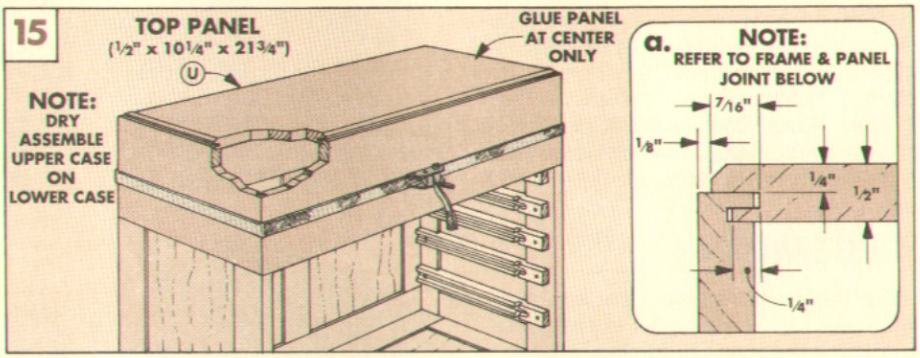

CUTTING A FRAME & PANEL JOINT

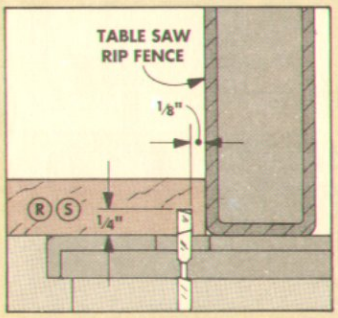

1 *Using the table saw, first cut a ⅛"-wide tongue on inside face of upper case sides, front, and back.*

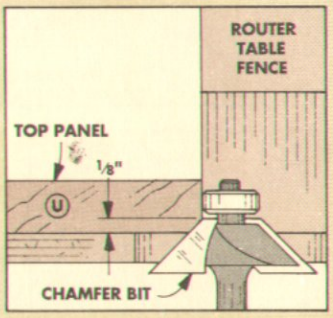

2 *Next, switch over to the router table and rout a ⅛"-wide chamfer along the top edge of the top panel (U).*

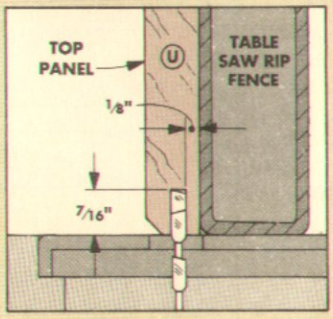

3 *Now, go back to the table saw and cut a kerf to create a ⅛"-wide tongue along all four edges of the top panel.*

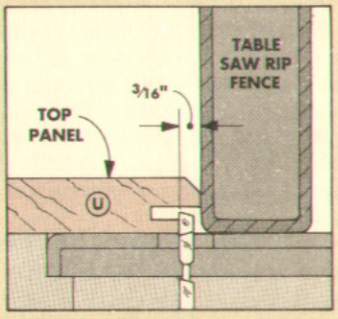

4 *To allow the top to "float" within the lid frame, remove 3/16" of the tongue from all four edges of the top panel.*

CONTINUED

TOP. Before gluing together the mitered case pieces, I glued-up an oversize blank for the ½"-thick **top panel (U)**, refer to Fig. 15.

To determine the size of the top panel, measure the length of a side (R) and front (S) from point to point. Then subtract ¼" from each of these measurements. Now cut the top panel (U) to this dimension. (The top for my case measured 10¼" x 21¾".)

FRAME & PANEL JOINT. The next step is to chamfer the edges of the top panel, refer to Fig. 15a and the box at the bottom of the opposite page. After the edges are chamfered, cut the frame and panel joint to fit the grooves that were cut earlier in the upper case sides (R), front (S), and back (S).

GLUE UP LID & CASE. Next the sides and top can be assembled as a single unit. Before gluing the pieces together, I dry assembled the upper case on top of the lower case, refer to Fig. 15. This allowed me one final check to make sure the pieces fit. But there's one little problem. Since the tenons on the lower case sides extend to the outside edge of the stiles, the front and back pieces won't fit on the case sides — just trim each tenon back so they'll fit, refer to Fig. 1 on page 22.

Now glue and clamp the upper case pieces together (be sure to check for square). Note: Don't glue the top panel (U) in the groove — it must be allowed to float. But to keep the panel from sliding around in the frame, place *one* drop of glue at each end, refer to Fig. 15.

Once the glue dries, cut off the lid, see Fig. 16. (For more on removing a lid from a box, refer to Bueron Taylor's tip on page 4.)

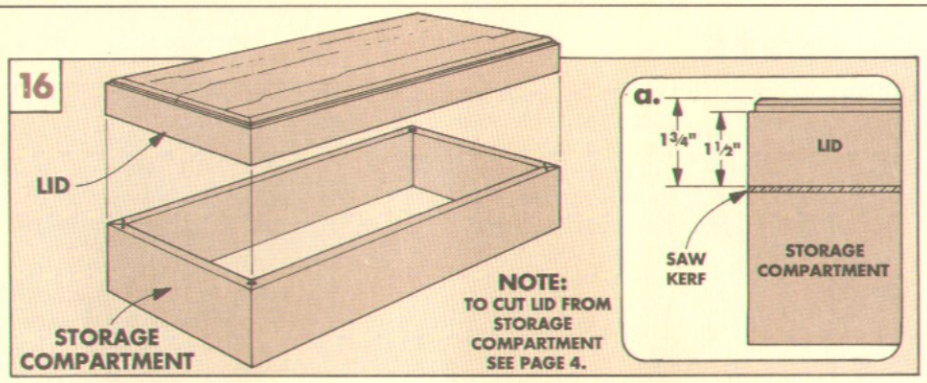

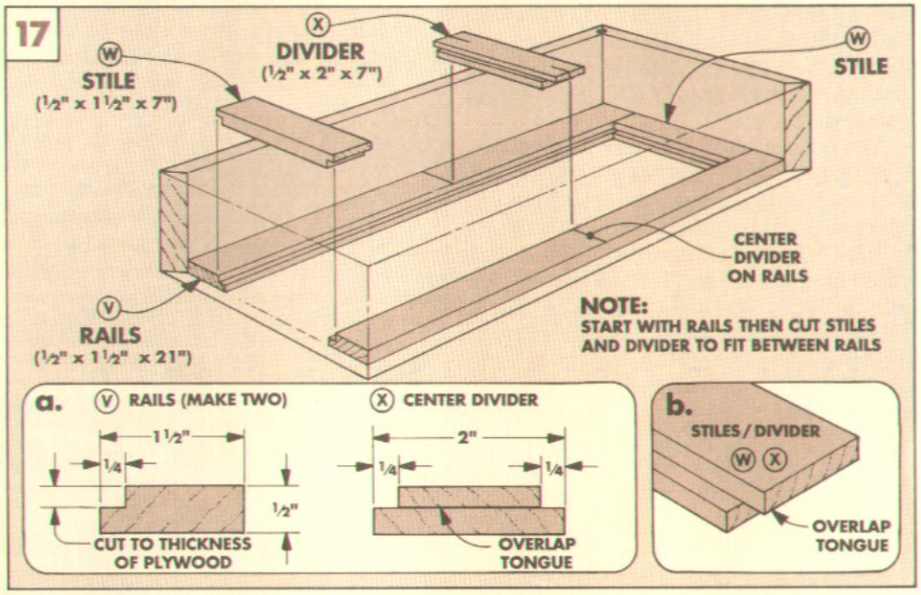

BOTTOM FRAME

Now the next thing to do is make a bottom for the upper case. The bottom consists of two ¼" plywood panels enclosed within a ½"-thick frame, refer to Fig. 18.

RAILS. To make the bottom frame, first cut two 1½"-wide **rails (V)** to fit between the sides (R) of the upper case, see Fig. 17. Then cut a ¼"-wide rabbet along the top edge of each rail, see Fig. 17a. (The stiles, divider, and panels rest in these rabbets.)

STILES & DIVIDER. Now cut two **stiles (W)** and a **divider (X)** to fit between the rails (V), see Fig. 17. To determine their length, position the rails inside the case then measure between the rabbets.

Then cut rabbets on the ends and sides of the stiles and divider, see Figs. 17a and 17b.

ASSEMBLY. After all the frame pieces are complete, glue them in place at the bottom of the upper case, see Fig. 17.

PANELS. Now cut two **panels (Y)** from ¼" plywood to fit the openings in the frame, see Fig. 18. Then glue them in place.

HOLES FOR LOCKING ROD. Before gluing the upper and lower cases together, drill a 3/16"-dia. hole in each front inside corner of the upper case, see Fig. 18a. These are for the brass rods that lock the drawers.

Finally, glue and clamp the upper case to the lower case, see Fig. 19.

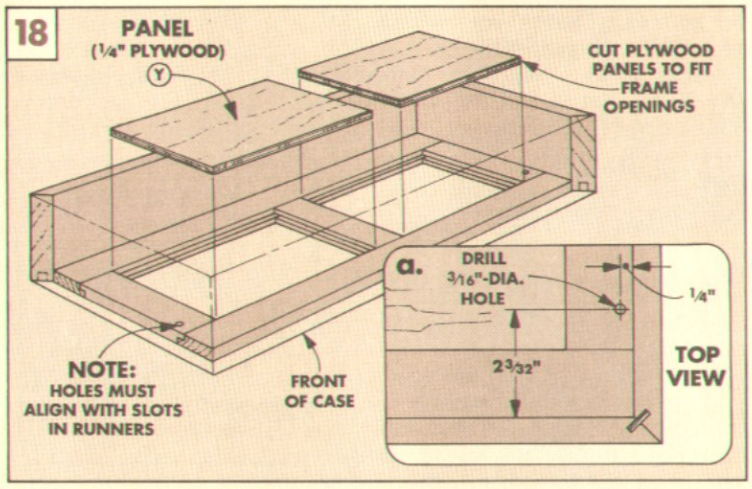

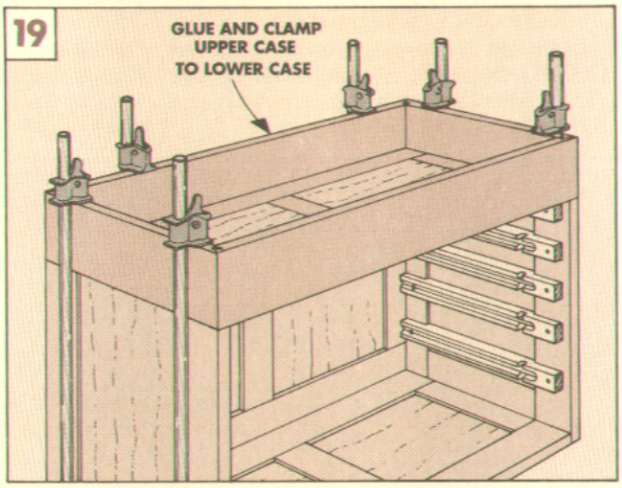

DRAWERS

Since hand tools come in different shapes and sizes, I designed this tool chest with different size drawers. There are four half-width drawers and three full-width drawers. Also, I recessed the drawers ¼" so the knobs wouldn't stick too far.

CUTTING PIECES. To begin the drawers, first rip enough ½"-thick stock to a finished width of 1¾" for the half-width drawer parts **(Z, AA)**, see Fig. 20. Then cut the parts for the top full-width drawer **(CC, DD)** to this same width.

The bottom two drawers are a little taller. The middle full-width drawer (parts **EE, FF**) is 2¼" high and the bottom drawer (parts **GG, HH**) is 2¾" high, see Fig. 20.

Now the parts are ready to be cut to finished length, see Fig. 20. To determine the length of the fronts and backs (AA, DD, FF, HH), measure the opening for each drawer. Then subtract ⅛" from this measurement to allow for a 1/16" gap around each drawer. (Remember the ½"-thick center support when measuring for the half-width drawers.)

Now cut the drawer sides (Z, CC, EE, GG) ½" less than the inside depth of the case.

RABBET JOINT. Over the years, I've come across tool chests like this where the drawers are assembled with butt joints and were falling apart. So for my drawers I decided to use a rabbet joint and strengthen it by gluing the drawer bottoms in place during assembly. Then I reinforced the top of each corner with a ⅛"-dia. dowel, refer to Fig. 21.

GROOVES. After cutting the rabbets, cut a groove on the outside face of each drawer *side* to ride over the runners. Cut these grooves slightly wider (1/32") than the runners, refer to Figs. 20a and 20b.

Now cut a groove along the bottom inside face of each drawer piece to accept a bottom panel, refer to Figs. 20a and 20b. (I cut the grooves to fit ¼"-thick plywood.)

BOTTOMS. To measure for the **bottoms (BB, II)**, dry assemble each drawer, refer to Fig. 20. After the bottoms are cut to size, glue and clamp all the drawers together.

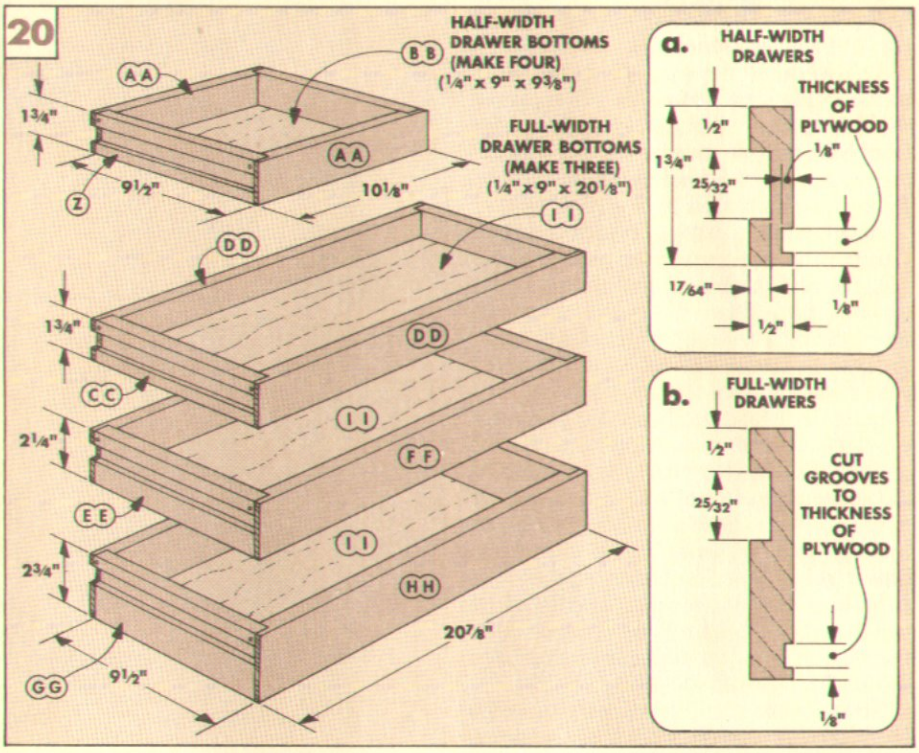

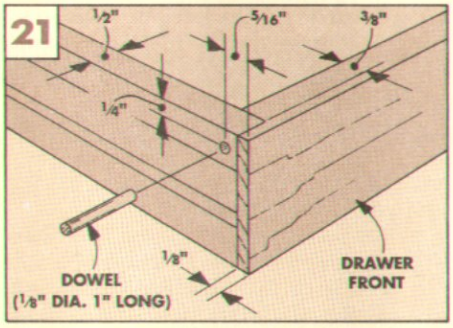

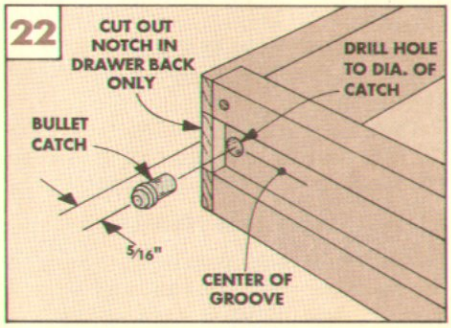

DOWELS & NOTCHES. When the glue was dry, I reinforced the top of each corner with a ⅛"-dia. dowel pin, see Fig. 21.

Now there's one little area at the back of each drawer groove that needs to be cut away or the drawer won't fit in the case, see Fig. 22. (Note: *Don't* cut this notch out of the drawer front, *only* the back.)

CATCHES & SLOTS. Next install bullet catches near the back end of each drawer groove, see Fig. 22. (These are a reminder not to pull the drawers out too far.)

To keep the drawers locked, a brass rod slides down through a small slot cut across the side of each drawer. Note: Only the *outside* face of each half-width drawer gets a slot cut in it, see Fig. 23.

CHAMFER TOP EDGES. Finally, to provide a smooth edge on the inside of each drawer, I routed a ⅛"-wide chamfer, see Fig. 24.

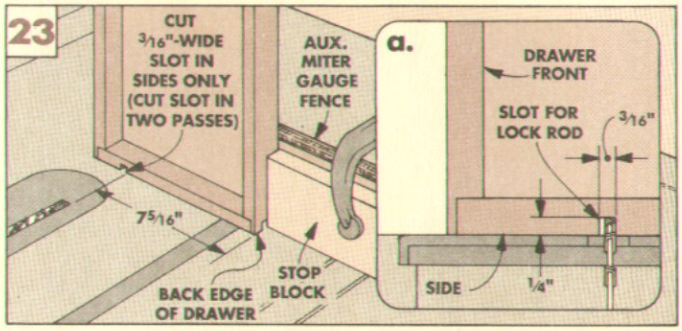

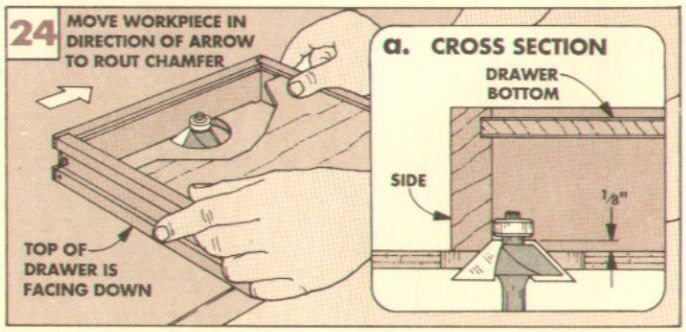

CENTER SUPPORT

With the drawers complete, the next step is to install the center support.

To ensure the support is installed in the center of the case, I used two spacers, see Fig. 25. Cut these half the width of the opening (minus half the thickness of the stile).

While holding the support in place, slide the spacers on the upper runners, see Fig. 25. Next drill two countersunk shank holes down through the upper case and into the support. Then screw the support in place.

Now check to see how your drawers fit. There should be an even gap (about 1/16") around each one. If not, see page 16.

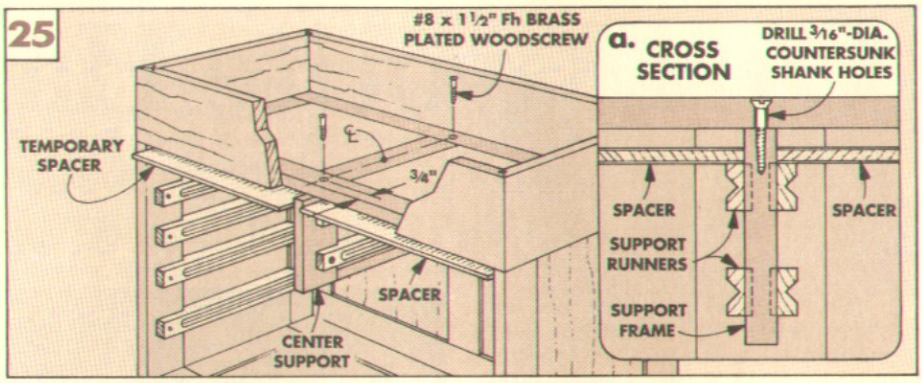

HARDWARE

Now handles for the lock rods can be made and the hardware mounted.

LOCK ROD HANDLES. First cut two **lock rod handles (JJ)** to finished size from 1/2"-thick stock, see Figs. 26 and 26a.

To make it easier to grab the rod handles with my fingers, I sanded a small finger grip on two of the edges, see Fig. 26b.

After the finger grips are sanded, drill a 1/8"-dia. hole in the bottom of each handle for the rod. Then glue the handles to the rods with epoxy. Once the epoxy dries, round the exposed end of the brass rod with a file. This will allow each rod to drop smoothly through the slots cut in the drawer sides and runners.

FINISH. Before installing the remaining hardware, I wiped one coat of Watco Danish Oil Finish (Medium Walnut) on all the wood parts. Then after 72 hours, I applied two coats of General Finishes' Royal Finish (Satin) to protect the wood.

DRAWER KNOBS. After the finish is completely dry, the hardware can be installed. I started by installing the drawer knobs. Each of the four half-width drawers has a knob centered on the drawer fronts, see Fig. 26. And the three full-width drawers get two knobs each.

HINGES & LOCK. Now mount the lid to the upper case with three brass hinges, see Fig. 26. (For a trick on how I cut the mortises for the hinges, see Shop Notes, page 17.)

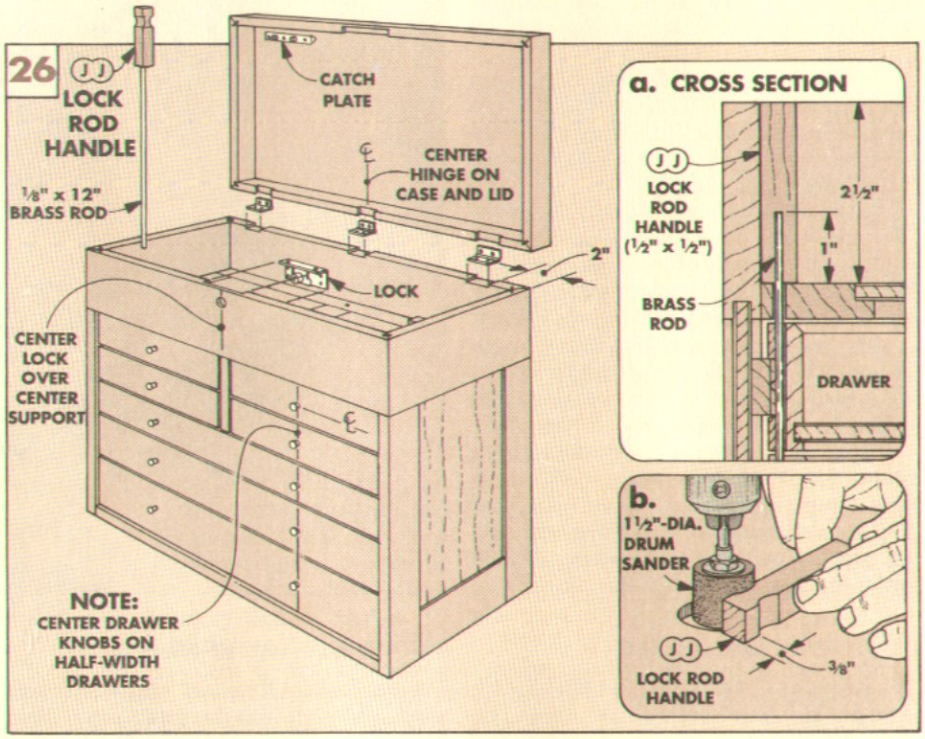

LID SUPPORT, LOCK, & CATCH PLATE. Now install two lid supports in the back corners of the lid and upper case, see Fig. 27.

Then after the lid supports are mounted, install the lock and catch plate, see Fig. 28.

SNAP CATCHES & HANDLES. Next I added two snap catches over the drawer pulls to hold the lid down tight, see Fig. 29.

Finally, to complete the chest, mount a handle to each end, see Fig. 29.

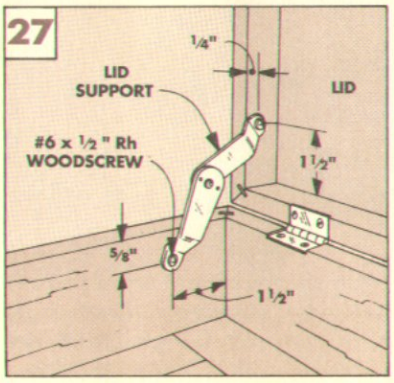

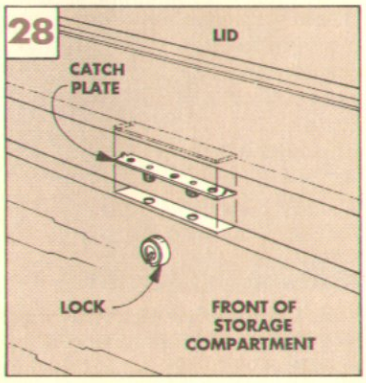

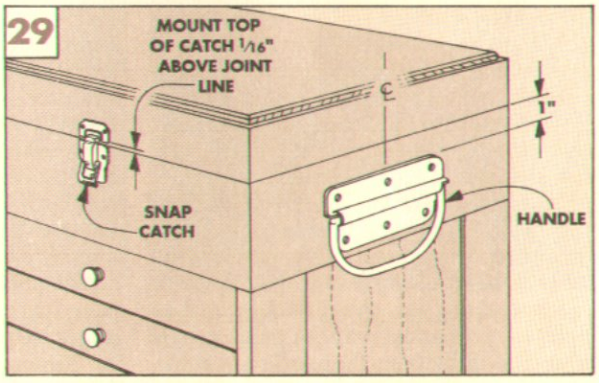

Our Favorite Hand Tools

A Cabinetmaker's Chest is the perfect place for storing a fine set of hand tools. Here's what the Woodsmith staff would put inside.

I've accumulated quite a few hand tools over the years. And now, with a new tool chest in the shop (see page 20), there's finally a place to store some of the finer ones all together. But as we were building the project everyone had a different idea of which hand tools are the most important to have in a woodworking shop.

So I took a little poll. Everyone here got an assignment: Pick one hand tool and tell me why it belongs in the chest. It has to be a tool you use often, and it also has to fit in one of the drawers in the chest.

I learned a couple things from this experiment. For one, stay out of the polling business — most people couldn't decide on just *one* tool. But for some tools there was agreement (like a good set of chisels, see below).

After my poll was complete, I made some changes. First I "edited" the final list a bit — I cut back on some of the more exotic and expensive tools. (Hand tools can cost a lot.)

Then I checked to see that the tools being shown (or ones like them) are readily available. It turns out they are, but you might not find them all at your local hardware store. So on page 31 we've listed a number of mail order catalogs that sell fine hand tools.

CHISEL SET

What kinds of tools would the *Woodsmith* staff put in the Cabinetmaker's Chest? The first preference was almost unanimous — a five-piece set of bevel-edged cabinetmaker's chisels, see photo. (Our favorite sizes are ¼", ⅜", ½", ¾", and 1".)

These are general purpose woodworking chisels. They're useful for a variety of trimming jobs in the shop, such as paring the cheeks of a tenon.

Why the wood handles, like those shown in the photo? Here there wasn't a consensus. I prefer wood handles, like on the Marples in the photo. But Jim Dolan, one of our assistant editors, prefers chisels with hard plastic handles, also made by Marples or Sorby.

More important than the type of handle is the quality of the blade. The best blades are those that take an edge easily (not too hard) and stay sharp a long time (not too soft).

Some of the best chisel blades are Sheffield steel (Rockwell 58-60), with a solid brass ferrule between the handle and blade.

DEAD-BLOW HAMMER

For the longest time, my only mallet was made of beech. But there are some good reasons to use a dead-blow hammer. (The one in the photo is a 14 oz. Stanley No-Mar.)

A dead-blow hammer is different than a wood mallet or a steel hammer — it rattles like a baby's toy. What makes it rattle are a bunch of tiny lead pellets inside the head of the hammer. These pellets clump together like a sand-filled sock when you strike something with the hammer. This means the head doesn't bounce.

A dead-blow hammer has a steel skeleton covered by a resilient plastic "skin." Which makes it as strong as a steel hammer, but with a more "furniture friendly" head.

The rubber-like coating insulates your hand from the shock of a strong blow. But best of all, the coating means the head won't dent a piece of wood when you strike it. Like when tapping together the two parts of a joint. Also, a dead-blow hammer won't leave a skid mark like some rubber mallets I've used.

A set of five bevel-edged chisels includes the right size for almost any paring task. I use a dead-blow hammer to tap together a tight-fitting assembly.

HAND PLANES

Of all the hand planes in the *Woodsmith* shop, two are always sharp. And not because they don't get used — just the opposite.

BLOCK PLANE. The Record No. 60½ low-angle block plane, the one being used in the photo, is Steve Curtis' favorite. (Steve is the *Woodsmith* shop manager.)

The low-angle (12°) of the blade is actually designed for planing end grain. (The blade in more conventional block planes is angled at 20° to 25°.)

Steve uses his low-angle block plane for everything — fitting drawers, smoothing a joint line, and removing saw blade marks from the edge of a workpiece.

JACK PLANE. The longer jack plane in the photo is my personal favorite, and it's probably older than I am. The plane is a Bailey No. 5C, the middle size in a family of steel bench planes manufactured at the turn of the century. Today, the Record company of England makes the same plane.

A jack plane is long enough (14") to flatten a panel, such as a table top, but it also works great for squaring up the edge of a board.

One of the things I like most about my Bailey is the sole (the bottom). It's corrugated (thus the "C" in its name) with a series of grooves. These reduce the resistance when planing, so it glides over a board.

A small block plane is great for smoothing an edge. The longer jack plane can be used for flattening the face of a board.

HAND SCRAPER

Before finishing a project, the surface should feel like glass. And it's easiest to achieve with a hand scraper. That's why most people on the *Woodsmith* staff have one in their personal tool box. (Did I mention a scraper is also inexpensive? The Swedish Sandvik scraper I like costs around $8.)

The scraper is used just after a hand plane, or just before sanding. (Some woodworkers use a scraper *instead* of sandpaper.) It removes the small ridges that are sometimes left by a plane. And it's useful for getting rid of burn marks left by machining.

Because a hand scraper isn't mounted in a body like a hand plane, it doesn't skim across the high points on a board. Instead, a scraper rides over the ridges and valleys scraping off the stubble. It's almost like getting a hot shave with a straight razor.

Brand new, a hand scraper is just a thin piece of steel with flat edges. But when it's sharpened, the flat edge is rolled over to produce a long burr, or hook. This is the cutting edge. (For more on sharpening a hand scraper, see *Woodsmith* No. 39.)

Hand scrapers come in several shapes and sizes. The one in the photo is rectangular (2½" x 6"), but curved scrapers are useful for cleaning up convex and concave surfaces, such as round-overs and coves.

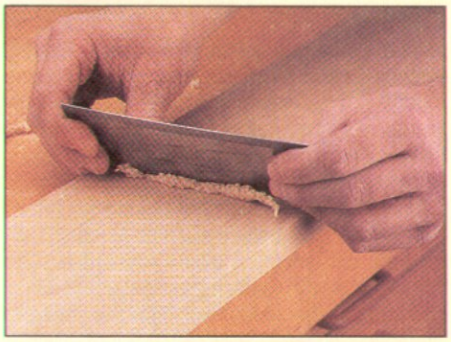

A scraper is tipped and pushed or pulled at an angle along a board. The scraper's edge produces very fine, see-through shavings.

COMBINATION SQUARE

A *good* combination square isn't the same tool you'd find for $9.99 at a hardware store. The Starrett 12" combination square the *Woodsmith* editors prefer is more precisely machined than most combination squares. It also costs more — about $55.

The Starrett square does the same things a cheaper square can do. But there *is* a difference. The head is cast-iron that's been ground to aircraft tolerances. And the blade is thicker, tempered steel with etched markings that don't fade. It works great. The blade doesn't slip when it's locked in place, and the scribing pin never falls out of its hole.

TRY SQUARE

I didn't have to *ask* everyone what hand tool they use most. In the case of Phil Totten (one of our assistant editors), I just looked in his shop apron. He carries around a 5" try square like an old carpenter with a folding rule.

Phil uses his square mainly for checking assemblies and setting up the table saw or band saw blade. The blade on his square is solid brass, and the wood handle has brass strips on the inside and outside faces.

Besides the way it looks and feels, the best part about a square like Phil's is the size. The blade is just 5" long and 1" wide — perfect for the front pocket of a shop apron.

BEVEL GAUGE

A sliding bevel gauge is more specialized than a combination square or a try square. But it's a must-have tool for some woodworkers. Like Gordon Gaippe, one of our editors who enjoys cutting dovetails by hand.

The bevel gauge has a thin metal blade that folds inside the wooden handle like a pocket knife. The blade is adjustable to any angle, then it's locked in place with a knob.

To use the bevel gauge for dovetails, Gordon first adjusts the blade to the desired angle using a protractor as a guide. Then he transfers this angle to his workpiece to lay out the pins for his dovetail joints.

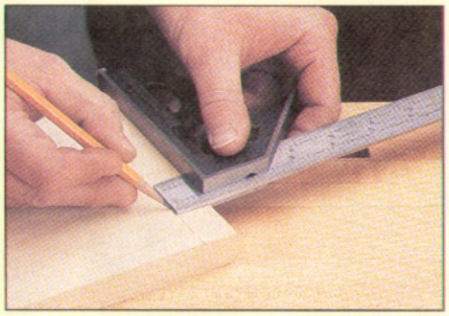

A combination square is a multi-purpose tool. Here it's being used to mark a straight line that's parallel to the end of a board.

After cutting a piece of wood to length, I'll check the end for square. But the try square must be accurate. That is, exactly 90°.

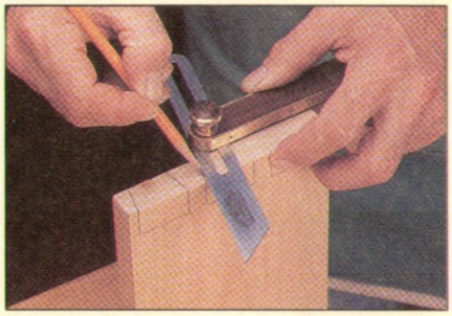

The blade on a sliding bevel gauge works together with the handle. It's a useful tool for laying out the pins of a dovetail joint.

STEEL RULES

For years I used the 12" rule from my Starrett square for measuring small workpieces. As a square the Starrett is a great tool. But as a rule it's actually *too* precise.

The problem is the Starrett rule is designed for a machinist. On the back side are 1/64" graduations which I seldom use (they're hard to read). Plus, you have to remove the adjustable head of the combination square or it gets in the way.

About a year ago I decided to design my own rule. One that's 12" long and just for woodworkers. On the face side of the *Woodsmith* 12" rule are two scales, both graduated in 16ths, see photo.

The best part about this side of the rule is that one scale reads right-to-left. It's perfect for measuring the distance between the table saw blade and the rip fence.

The back side of this rule is unique: one scale is graduated in 32nds, and the other is a center-finding scale with "0" in the middle.

After getting used to the 12" rule, I wanted a smaller version to keep in my apron. So I went back to the manufacturer.

I now use the *Woodsmith* 6" rule for measuring the depth of a mortise or the thickness of a board. And like other good rules, it's tempered steel with a satin chrome finish and etched markings.

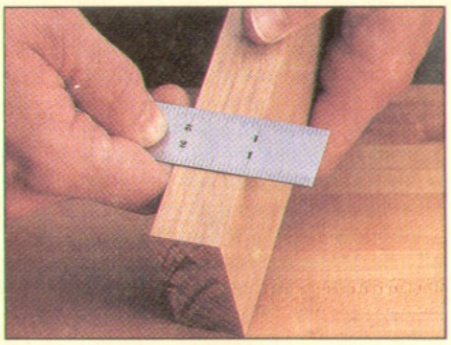

A shop rule should be easy to read. Etched and painted markings stand out against the satin chrome finish so there's no glare.

FOUR-IN-HAND RASP

A rasp is a quick substitute for a round-over bit or a coarse piece of sandpaper. It's a one-purpose tool for shaping, with four different surfaces — two flat and two curved. (A four-in-hand rasp costs around $10.)

On one end of the tool are a flat and curved rasp with coarse teeth. On the other end are a flat and curved file with finer teeth. I'll use the file end on hard wood and soft metals. The rasp end is for rough-cutting wood.

Next to the chisel set, the four-in-hand rasp was Dave Kreyling's tool of choice. Dave, one of our senior illustrators, explained his reasoning to me. "When fitting a square tenon into a mortise with round ends (cut with a drill or router bit), a rasp makes good sense. Sandpaper is too slow, and a round-over bit in the router won't work. But a rasp takes two seconds."

Shop Note: Four-in-hand rasps have a "safety edge" that won't cut into the shoulders of a tenon like other rasps that have teeth on the edges.

Dave's right, of course. A four-in-hand rasp is the best tool for a lot of small jobs. Like filing a radius on a sharp corner (use the rasp end). Or softening the edges of a long, square table leg (use the file end). Either way, it's best to complete the job by sanding the edge left by a file or a rasp.

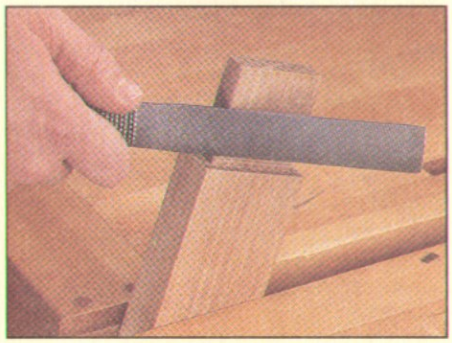

You don't need a lot of different files if you have a four-in-hand rasp. Sharp teeth make quick work of rounding an edge.

DOVETAIL SAW

You don't have to cut a lot of dovetails by hand to benefit from a dovetail saw. The saw in the photo is a useful tool for many jobs.

The 8"-long blade has 20 teeth per inch and a very narrow "set." This alone puts the saw in a class by itself. Especially when it comes to cross-cutting into a narrow piece of wood, such as the shoulders of a tenon — they end up very clean and smooth.

Many old-time woodworkers use no other saw for cutting tenons. The brass back not only stiffens the blade, it adds a little weight. So you don't have to "lean on" the saw heavily — light cutting pressure is enough.

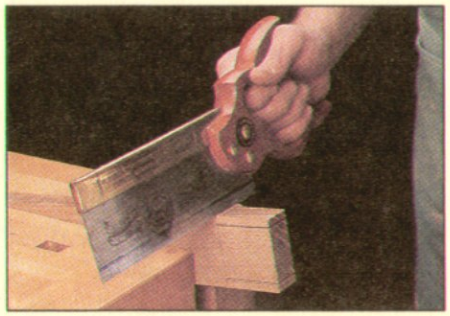

A dovetail saw has a stiff back and a thin blade. With 20 teeth per inch, it makes a smooth cut quickly, and not just on dovetails.

COPING SAW

If you see an interesting piece of furniture in *Woodsmith*, the design probably started in our design department. Ken Munkel is our design director, and he often builds an entire project so someone else can build it again.

The difference is, when Ken builds a "big" project, such as a rocking chair, it's often less than 1 ft. tall. (It's a scaled-down prototype we use to evaluate the design.) And to build it he uses small tools, like a coping saw.

It's the ideal tool for making curved cuts on small workpieces, like moldings and picture frames. It's always a treat to watch Ken build a "big" project using a small hand saw.

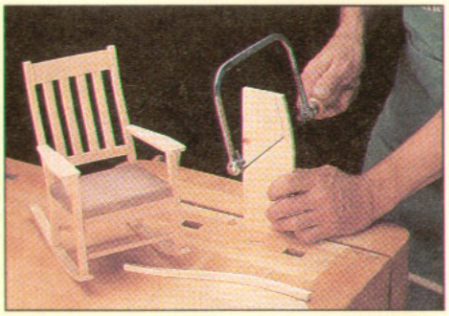

The coping saw has a very thin blade, like a serrated wire. It's great for cutting small pieces or for making curved cuts.

FOLDING DOZUKI

Start talking about hand saws and pretty soon there's a full-blown discussion. "Western saws (like the dovetail and gent's saw) are best because they're heavier and stiffer."

Bob Whitmer has different ideas. (Bob's one of our graphic designers and also a woodworker.) "Japanese saws have a much finer blade, so they leave a smaller kerf and cut fast and clean. They make it easier to cut really tight-fitting joints."

But there's a place in every collection of fine hand tools for both Western *and* Japanese saws. I especially like the folding dozuki — and it fits in the new tool chest.

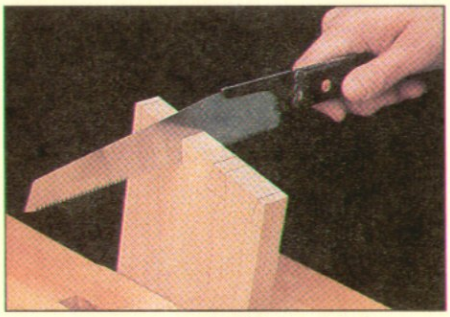

A dozuki saw cuts an even finer kerf than a western saw. It cuts on the pull stroke, so the blade stays in tension and cuts straight.

Sources

SHELVING UNIT

The only hardware needed for the Shelving Unit shown on page 6 is some taper connectors that allow the unit to knock down. Each taper connector is actually two pieces, a male and a female. This forms a set, and you will need six sets for each Shelving Unit you plan to build.

Woodsmith Project Supplies is offering the taper connectors and screws in sets of six.

W85-785-100 Shelving Unit Hardware Kit..... $4.95

- (6 sets) Taper Connectors, 4" Long, Extra Heavy Gauge, Cold-Rolled Steel, with Screws

FINISH. To seal the Shelving Units, we wiped on a coat of General Finishes' Sealacell. Then for added protection we applied two coats of Arm-R-Seal. For more on ordering these finishes, see information in the next column.

CABINETMAKER'S CHEST

Woodsmith Project Supplies is offering a hardware kit (see photo) to build the Chest on page 20. (Wood is not included.)

W85-785-200 Cabinetmaker's Chest Hardware Kit $74.95

- (2) Brass Rods, 1/8" x 12"
- (14) Bullet Catches, Solid Brass Shell with Plated Steel Bullet, 1/4" Dia. x 3/8" Long
- (10) Solid Brass Drawer Knobs, 1/2" Dia. x 3/8" Tall

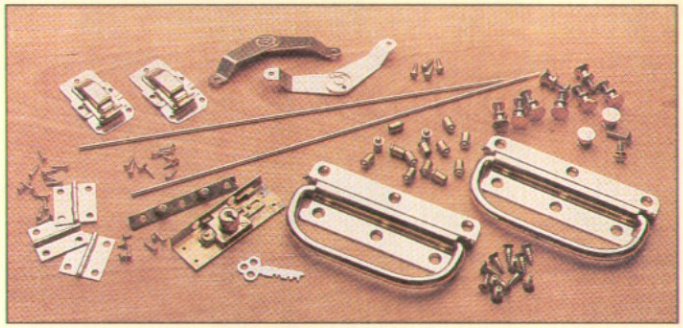

- (1) Solid Brass Lock with Catch Plate, Key, Screws, and Mounting Instructions
- (3) Solid Brass Hinges, 1 1/16" Open Width x 1 1/4" Long, with Mounting Screws
- (2) Lid Supports, Brass-Plated, 4 3/16" Long, with Screws
- (2) Catches, Brass-Plated, 1 1/4" x 2 1/4", with Mounting Screws
- (2) Solid Brass Handles, 4 3/4" Long, with Mounting Screws
- (2) No. 8 x 1 1/2" Brass-Plated Fh Woodscrews
- (28) No. 6 x 1/2" Fh Woodscrews

FINISH. To stain the Chest, we used Watco Danish Oil (Medium Walnut). After the stain dried, we wiped on two coats of General Finishes' Royal Finish Top Coat (satin). For information on these finishes, see below.

FINISHES

Watco Danish Oil is available at local retail stores and through the Mail Order Sources below.

Woodsmith Project Supplies is offering the General Finishes' products we used on the Tool Chest and Shelving Units.

Sealacell Sealer (Clear)
W85-4003-501..... $6.45 pint
W85-4003-601 ... $9.95 quart

Royal Finish Oil and Urethane Top Coat (Satin)
W85-4003-502..... $6.45 pint
W85-4003-602.....$9.95 quart

Arm-R-Seal Oil and Urethane Top Coat (Satin)
W85-4003-520 ..... $6.45 pint
W85-4003-620.....$9.95 quart

ROUTER BITS

We used a variety of router bits to build the projects in this issue. **Woodsmith Project Supplies** is offering these high-quality, carbide-tipped bits. Order the shank size to fit your router.

W85-1514-643 1/2" Straight Bit (1/4" shank) $13.95
W85-1512-676 1/2" Straight Bit (1/2" shank) $14.95
W85-1514-811 1/8" Round-Over Bit (1/4" shank) $23.95
W85-1512-821 1/8" Round-Over Bit (1/2" shank) $26.95
W85-1514-814 1/4" Round-Over Bit (1/4" shank) $23.95
W85-1512-823 1/4" Round-Over Bit (1/2" shank) $24.95
W85-1514-170 Chamfer Bit (1/4" shank) $21.95
W85-1512-175 Chamfer Bit (1/2" shank) $23.95
W85-1514-381 V-Groove Bit (1/4" shank) $23.95

HAND TOOLS

On page 28, we featured an article on our favorite hand and layout tools. Many of these tools are available at local hardware stores, building centers, and retail woodworking shops.

In addition, they're also available through many of the Mail Order Sources listed below. One of the catalogs that has the most extensive collections of quality hand tools is Garrett Wade.

Woodsmith Project Supplies is also offering four of the tools shown on pages 28 to 30.

W85-701-116 Woodworker's 6" Rule $9.95
W85-701-121 Woodworker's 12" Rule, Reads Right to Left and Left to Right ..$16.95
W85-5005-163 Sandvik Hand Scraper, 2 1/2" x 6" $7.95
W85-5006-380 Coping Saw, 6 3/4" Blade Length $15.95

ORDER INFORMATION

BY MAIL

To order by mail, use the form enclosed with the current issue. The order form includes information on handling and shipping charges, and sales tax. Send your mail order to:

Woodsmith Project Supplies
P.O. Box 10350
Des Moines, IA 50306

BY PHONE

For fastest service use our Toll Free order line. Open Monday through Friday, 7:00 AM to 7:00 PM Central Time.

Before calling, have your VISA, MasterCard, or Discover Card ready.

1-800-444-7527

Note: Prices subject to change after April, 1993.

MAIL ORDER SOURCES

Similar hardware and supplies may be found in the following catalogs. Please call each company for a catalog or information.

Constantine's
800-223-8087
Taper Connectors, Chest Hardware, Watco Oil, Router Bits, Hand Tools, Plasti Dip

Craftsman Wood Service
800-543-9367
Chest Hardware, Watco Oil, Hand Tools, Plasti Dip

Garrett Wade
800-221-2942
Hand Tools, Router Bits, Chest Hardware

The Woodworkers' Store
612-428-3200
Taper Connectors, Chest Hardware, General Finishes, Router Bits, Hand Tools

Woodworker's Supply
800-645-9292
Chest Hardware, Watco Oil, Router Bits, Hand Tools

The Japan Woodworker
800-537-7820
Hand Tools, Japanese Saws

Woodworking Unlimited/Shopsmith
800-543-7586
Hand Tools, Router Bits, Chest Hardware, Watco Oil

Bridge City Tool Works
800-253-3332
Measuring and Layout Tools

Woodcraft
800-225-1153
Chest Hardware, Watco Oil, Router Bits, Hand Tools

Final Details

Cabinetmaker's Chest

▲ *The Cabinetmaker's Chest has seven drawers for storing hand tools. I lined each drawer bottom by gluing felt to a piece of posterboard and cutting it to fit. Then the lining is easy to clean or replace.*

Sanding Table

▲ *This table filters airborne dust as well as dust from sanding. A furnace blower draws dust through the pegboard top and furnace filters.*

Shelving Unit

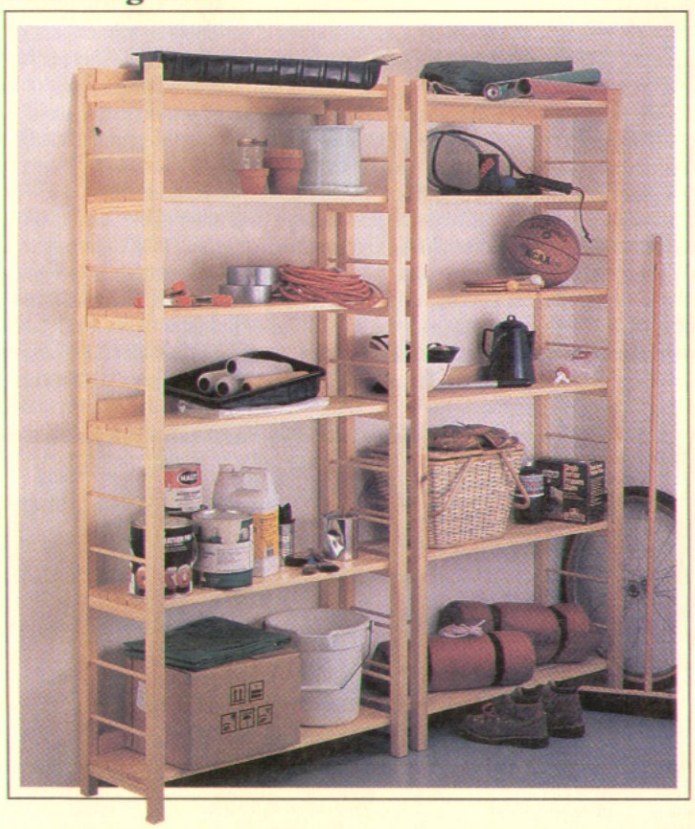

One of the best features of these shelving units is adjustability. You can easily rearrange the position of each shelf as your storage needs change. To raise or lower the shelves, simply lift them off the rungs and reposition.